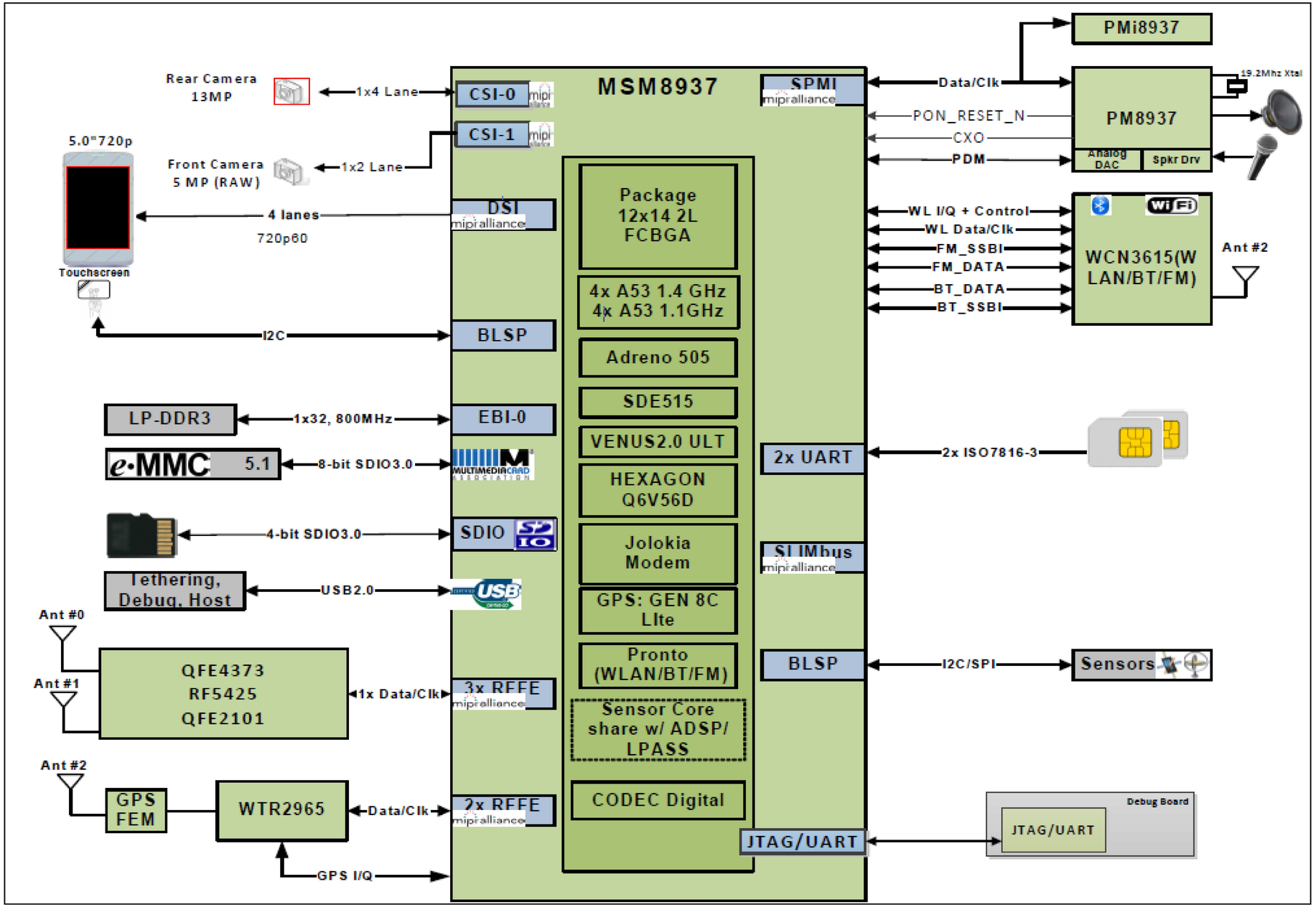

Block Diagram

MSM8937 GPIO Configuration

GPIO_0	NC	GPIO_41	SCAM_ID	GPIO_82	FM_DATA
GPIO_1	NC	GPIO_42	ACCL_INT1_N	GPIO_83	BT_CTL
GPIO_2	NC	GPIO_43	ALSP_INT_N	GPIO_84	BT_DATA
GPIO_3	WDOG_DISABLE	GPIO_44	MAG_RST_N	GPIO_85	NC
GPIO_4	UART_MSM_TX	GPIO_45	NC	GPIO_86	NC
GPIO_5	UART_MSM_RX	GPIO_46	NC	GPIO_87	NC
GPIO_6	NC	GPIO_47	NC	GPIO_88	NC
GPIO_7	NC	GPIO_48	NC	GPIO_89	NC
GPIO_8	NC	GPIO_49	UIM_BATT_ALM	GPIO_90	NC
GPIO_9	NC	GPIO_50	NC	GPIO_91	KEY_VOL_UP_N
GPIO_10	TP_I2C_SDA	GPIO_51	UIM1_DATA	GPIO_92	NC
GPIO_11	TP_I2C_SCL	GPIO_52	UIM1_CLK	GPIO_93	NC
GPIO_12	NC	GPIO_53	UIM1_RESET	GPIO_94	NC
GPIO_13	NC	GPIO_54	NC	GPIO_95	NC
GPIO_14	SENSOR_I2C_SDA	GPIO_55	UIM2_DATA	GPIO_96	NC
GPIO_15	SENSOR_I2C_SCL	GPIO_56	UIM2_CLK	GPIO_97	NC
GPIO_16	NC	GPIO_57	UIM2_RESET	GPIO_98	NC
GPIO_17	NC	GPIO_58	NC	GPIO_99	NC
GPIO_18	NC	GPIO_59	NC	GPIO_100	RFFE1_CLK
GPIO_19	NC	GPIO_60	LCD_RST_N	GPIO_101	RFFE1_DATA
GPIO_20	ACC_SPI_MOSI	GPIO_61	LCD_ID	GPIO_102	NC
GPIO_21	ACC_SPI_MISO	GPIO_62	NC	GPIO_103	NC
GPIO_22	ACC_SPI_CS	GPIO_63	APP_BOOT_FROM_ROM	GPIO_104	NC
GPIO_23	ACC_SPI_CLK	GPIO_64	TP_RST_N	GPIO_105	GRFC1_SEL
GPIO_24	LCD_TE0	GPIO_65	TP_INT_N	GPIO_106	NC
GPIO_25	NC	GPIO_66	GP_PDM_A0	GPIO_107	GRFC3_SEL
GPIO_26	CAM_MCLK0	GPIO_67	SDCARD_DET_N	GPIO_108	NC
GPIO_27	NC	GPIO_68	NC	GPIO_109	GRFC5_SEL
GPIO_28	CAM_MCLK2	GPIO_69	CDC_PDM_CLK	GPIO_110	GRFC6_SEL
GPIO_29	CAM_I2C_SDA0	GPIO_70	CDC_PDM_SYNC	GPIO_111	GRFC7_SEL
GPIO_30	CAM_I2C_SCL0	GPIO_71	CDC_PDM_TX	GPIO_112	GRFC8_SEL
GPIO_31	NC	GPIO_72	CDC_PDM_RX0	GPIO_113	GRFC9_SEL
GPIO_32	NC	GPIO_73	CDC_PDM_RX1	GPIO_114	GRFC10_SEL
GPIO_33	NC	GPIO_74	CDC_PDM_RX2	GPIO_115	GRFC11_SEL
GPIO_34	FLASH_STROBE_NOW	GPIO_75	BT_SSBI	GPIO_116	GRFC12_SEL
GPIO_35	MCAM1_PWDN	GPIO_76	WL_CMD_DATA_2	GPIO_117	NC
GPIO_36	NC	GPIO_77	WL_CMD_DATA_1	GPIO_118	EXT_GPS_LNA_EN
GPIO_37	FORCE_USB_BOOT	GPIO_78	WL_CMD_DATA_0	GPIO_119	CH0_GSM_TX_PHASE_D0
GPIO_38	NC	GPIO_79	WL_CMD_SET	GPIO_120	RFFE5_CLK
GPIO_39	SCAM_PWDN	GPIO_80	WL_CMD_CLK	GPIO_121	RFFE5_DATA
GPIO_40	SCAM_RST_N	GPIO_81	FM_SSBI	GPIO_122	NC

GPIO_123	NC
GPIO_124	NC
GPIO_125	NC
GPIO_126	NC
GPIO_127	NC
GPIO_128	NC
GPIO_129	NC
GPIO_130	NC
GPIO_131	NC
GPIO_132	NC
GPIO_133	NC

PMI8937 MPP Configuration

MPP_1	NC
MPP_2	GREEN_LED
MPP_4	FLASH_STROBE_NOW

PM8937 GPIO/MPP Configuration

GPIO_1	NC	MPP_1	VDD_PX_BIAS_MPP_1
GPIO_2	SDCARD_DET_N	MPP_2	NC
GPIO_3	UIM_BATT_ALM	MPP_3	VREF_DAC_MPP_3
GPIO_4	NC	MPP_4	QUIET_THERM
GPIO_5	NC		
GPIO_6	NC		
GPIO_7	NC		
GPIO_8	NC		

GPIO MAP

Title

Size | Sheet Name | Rev

Date: | Sheet of

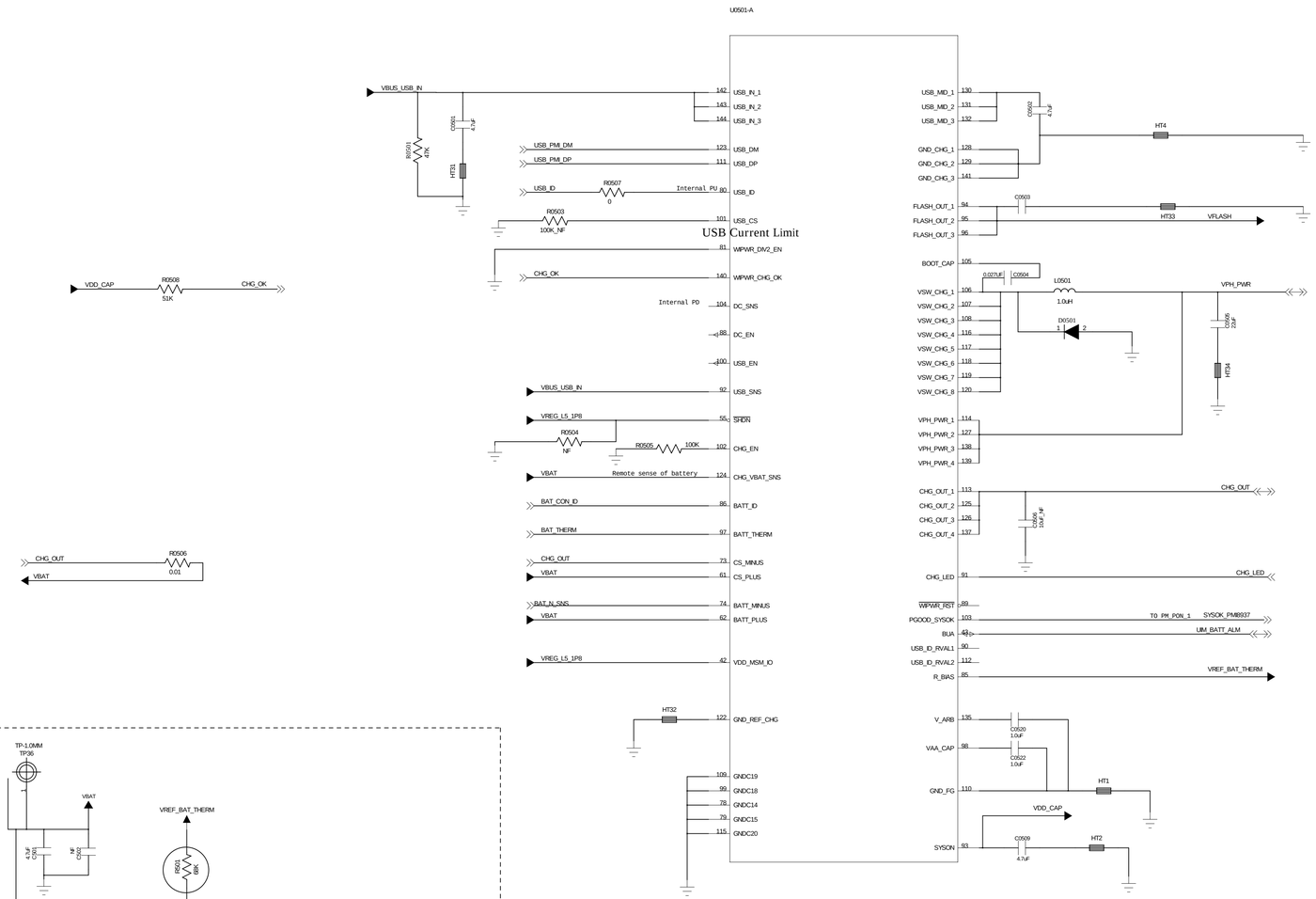

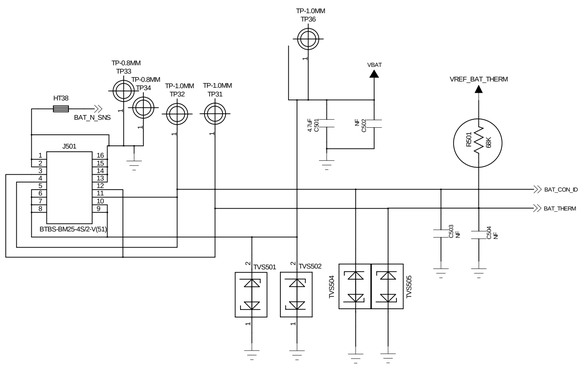

BATTERY CONNECTOR

PMI8937 CHARGER

Title

Size | Name | Rev

Date: | Sheet of

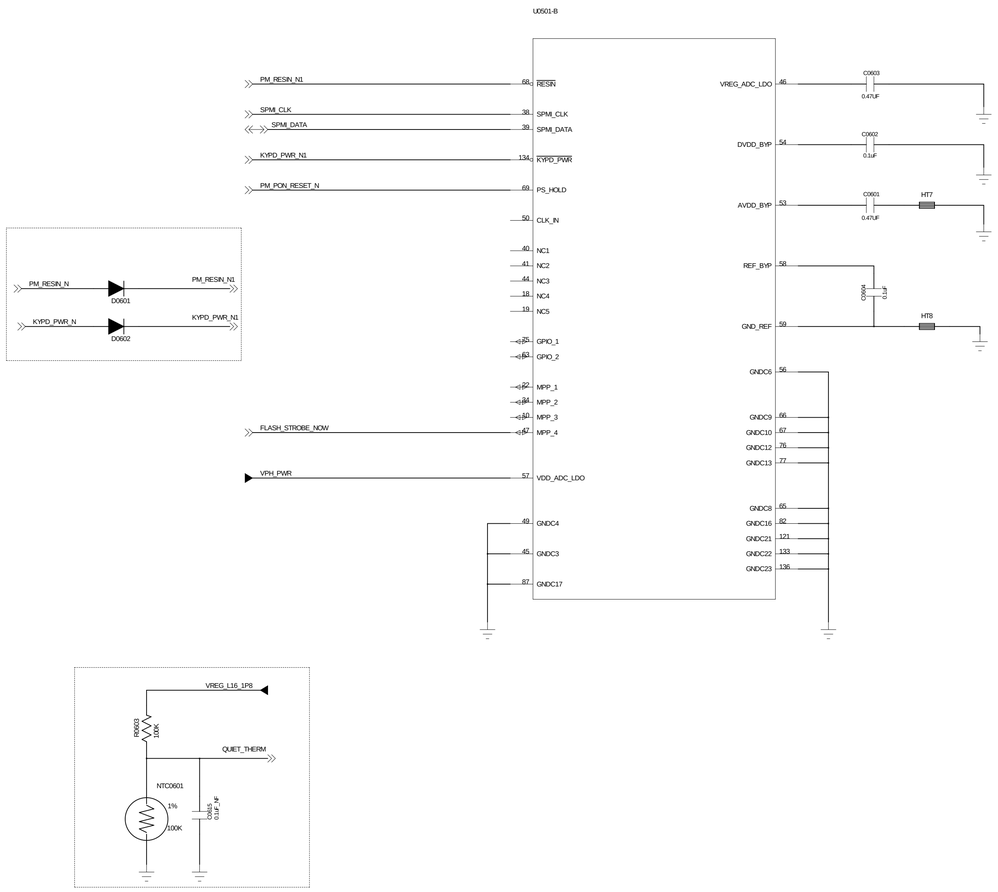

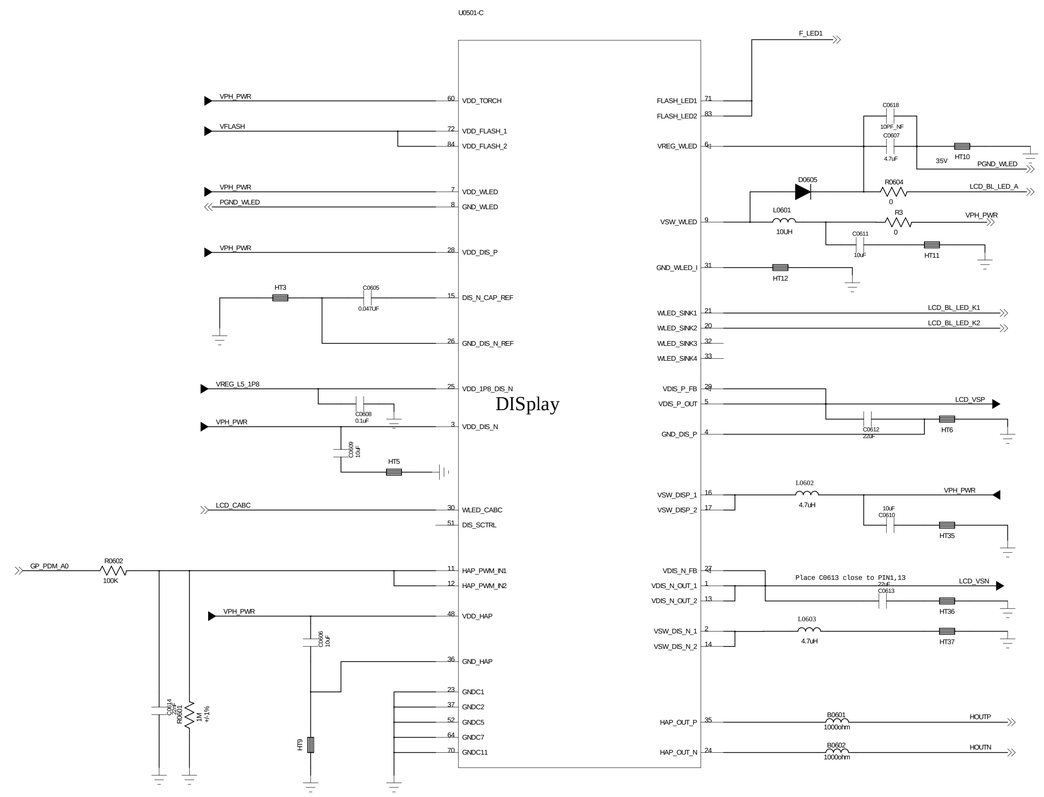

PMI8937 Control/Interface

QUALCOMM Technologies, Inc.
5775 Morehouse Drive
San Diego, CA 92121-1714
U.S.A.

Title

Size | Name | Rev

Date: | Sheet | of

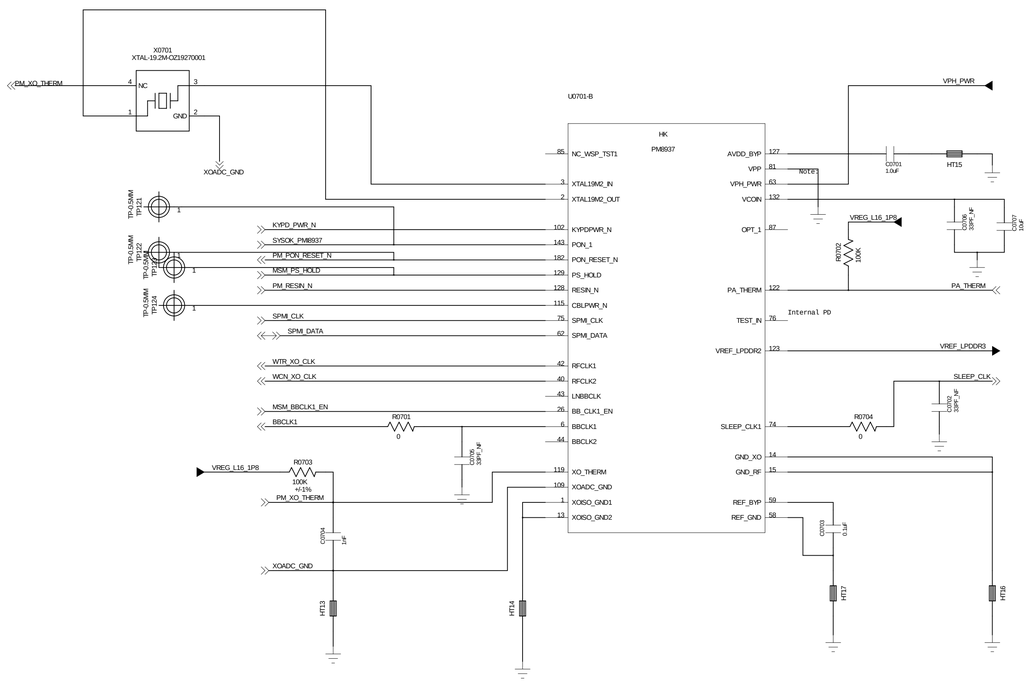

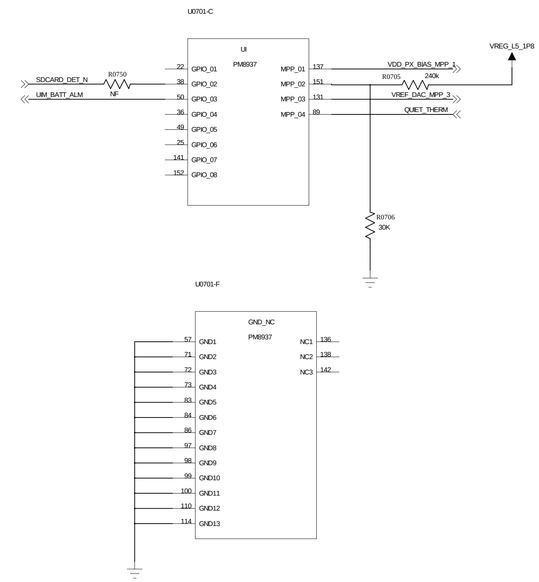

PM8937 Control and MPP/Clock

QUALCOMM Technologies, Inc.
5775 Morehouse Drive
San Diego, CA 92121-1714
U.S.A.

Title

Size | Name | Rev

Date: | Sheet of

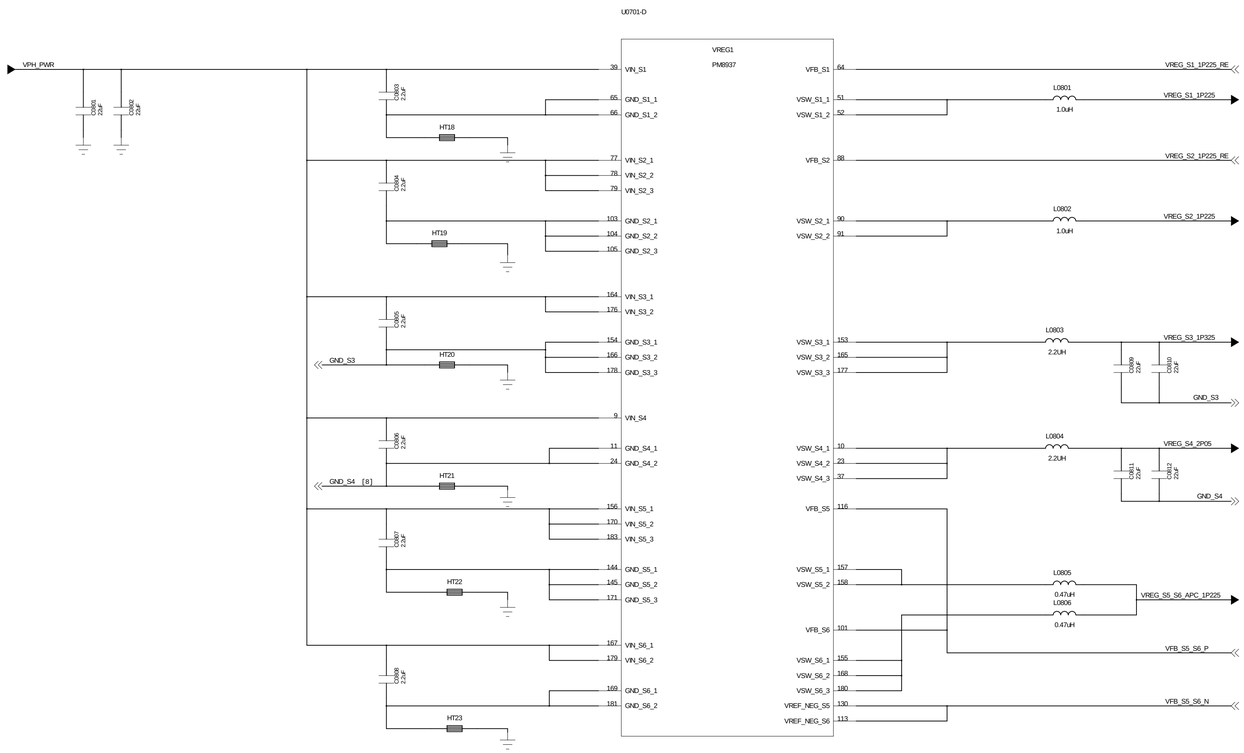

PM8937 Buck converter

QUALCOMM Technologies, Inc.
5775 Morehouse Drive
San Diego, CA 92121-1714
U.S.A.

Title

Size | Name | Rev

Date: | Sheet of

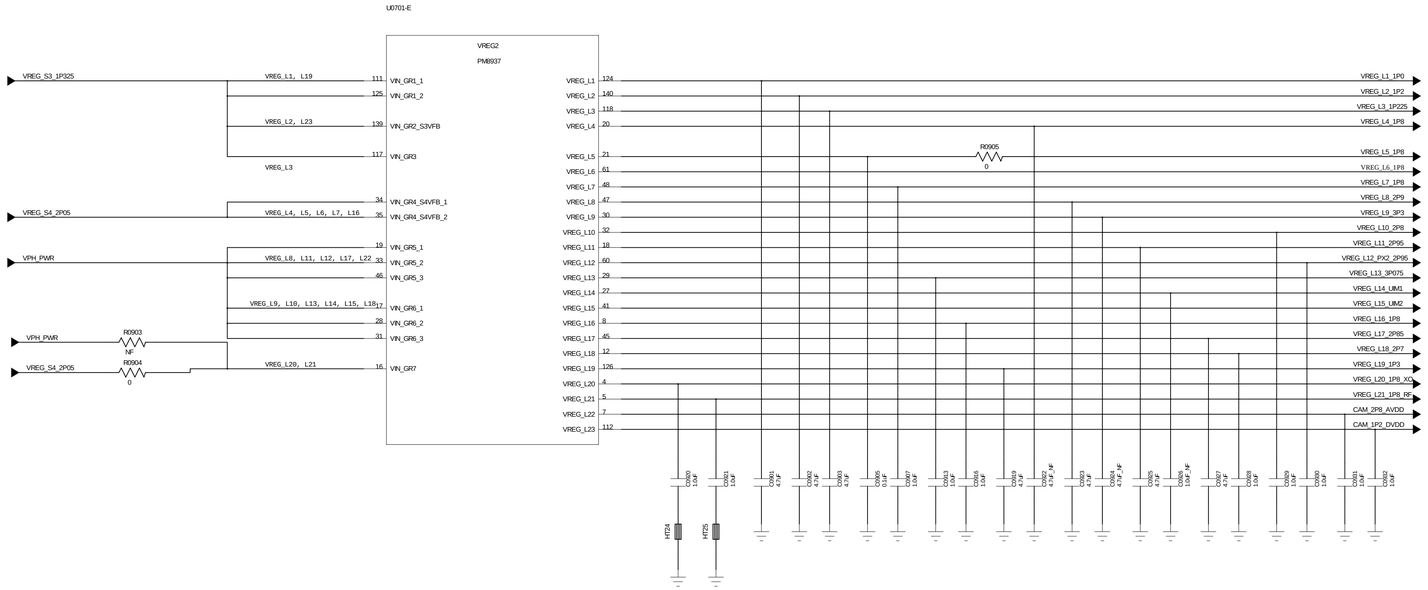

PM8937 LDO circuits

QUALCOMM Technologies, Inc.
5775 Morehouse Drive
San Diego, CA 92121-1714
U.S.A.

Title

Size | Name | Rev

Date: | Sheet | of

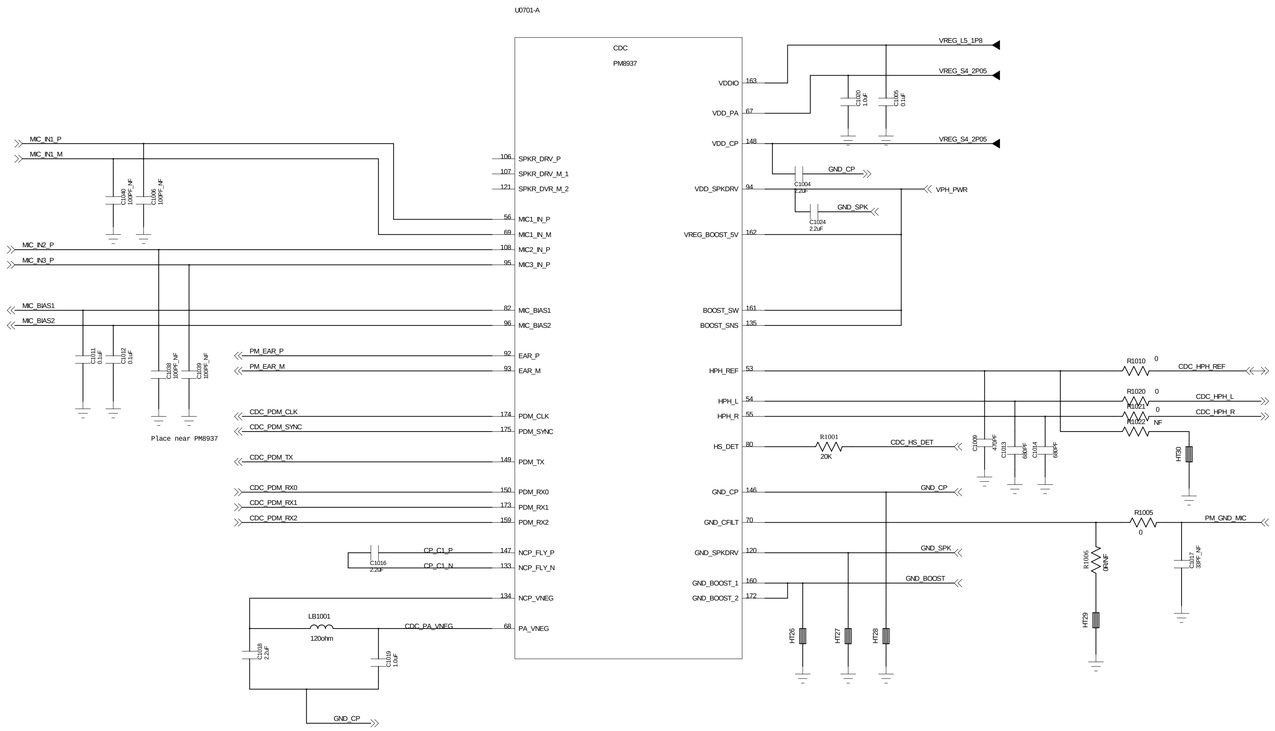

PM8937 Codec

QUALCOMM Technologies, Inc.
5775 Morehouse Drive
San Diego, CA 92121-1714
U.S.A.

Title

Size | Name | Rev

Date: | Sheet of

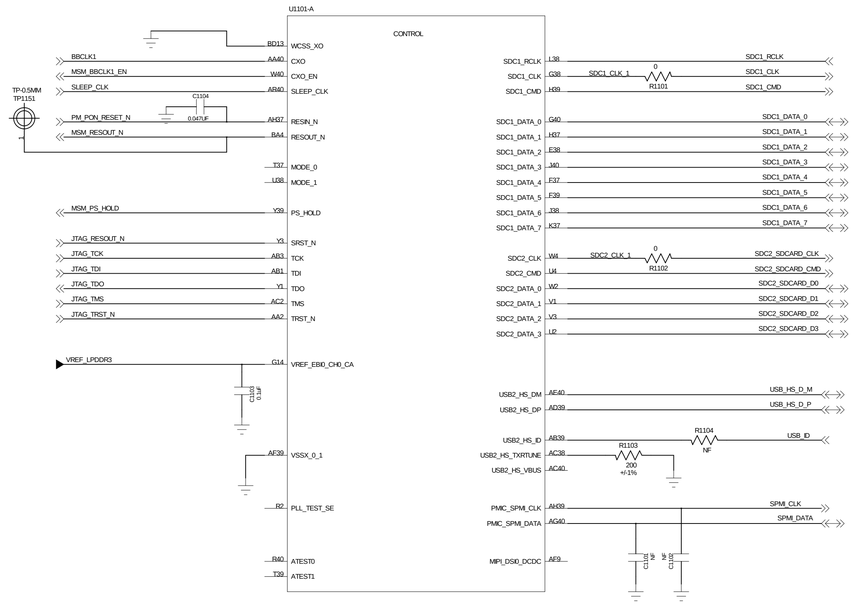

MSM8937 Control

QUALCOMM Technologies, Inc.
5775 Morehouse Drive
San Diego, CA 92121-1714
U.S.A.

Title

Size | Name | Rev

Date: | Sheet | of

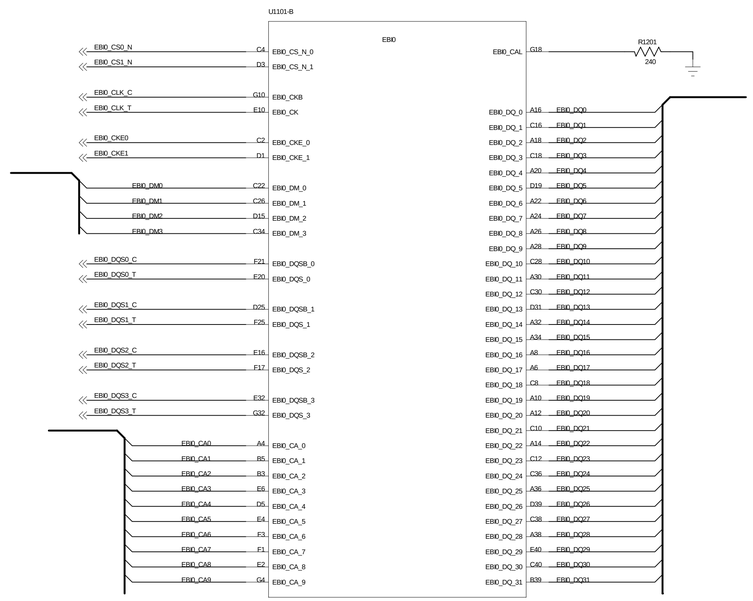

MSM8937 EBI

QUALCOMM Technologies, Inc.
5775 Morehouse Drive
San Diego, CA 92121-1714
U.S.A.

Title

Size | Name | Rev

Date: | Sheet of

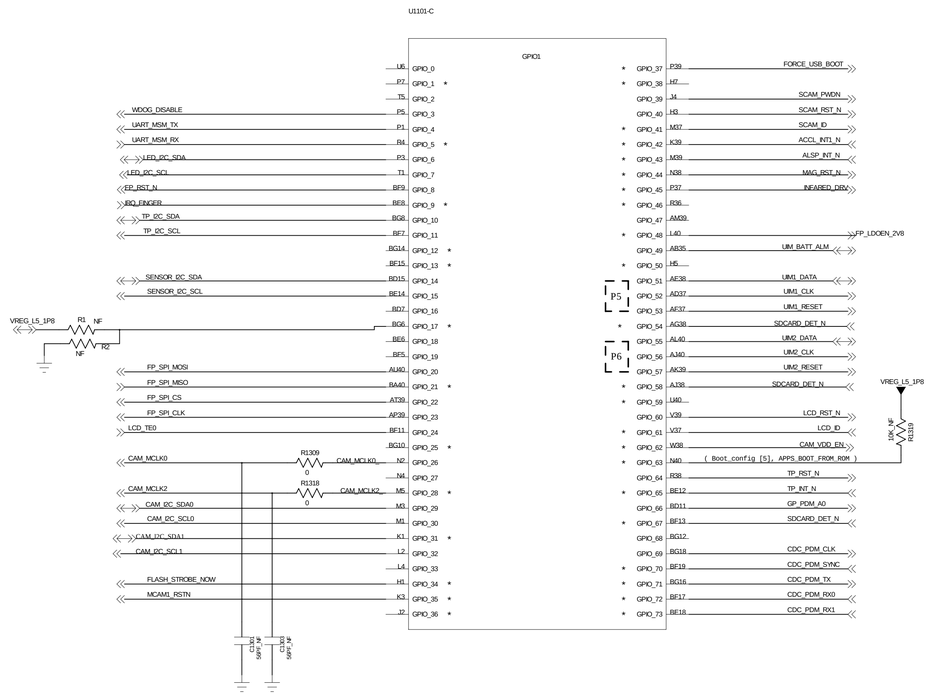

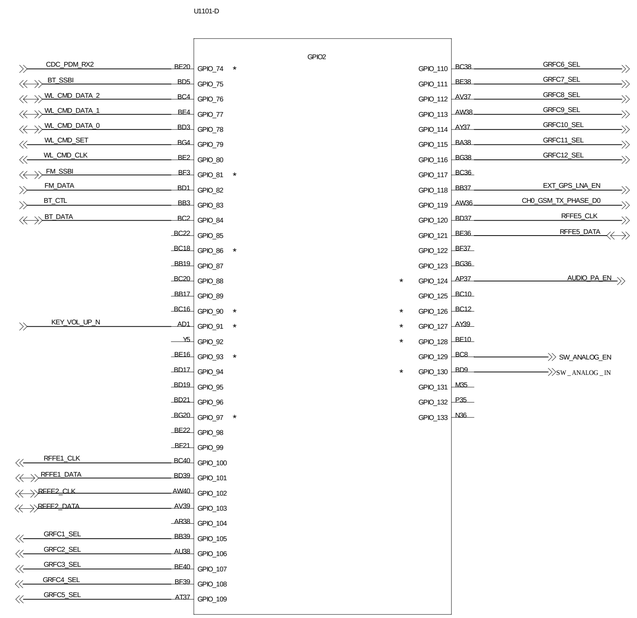

I2C PULL-UP RESISTORS

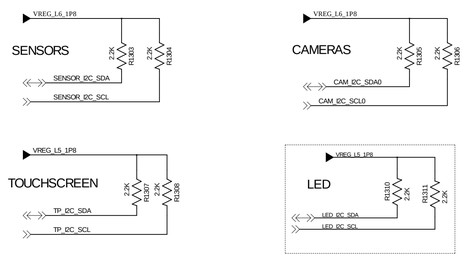

MSM8937 GPIO

QUALCOMM Technologies, Inc.
5775 Morehouse Drive
San Diego, CA 92121-1714
U.S.A.

Title

Size | Name | Rev

Date: | Sheet of

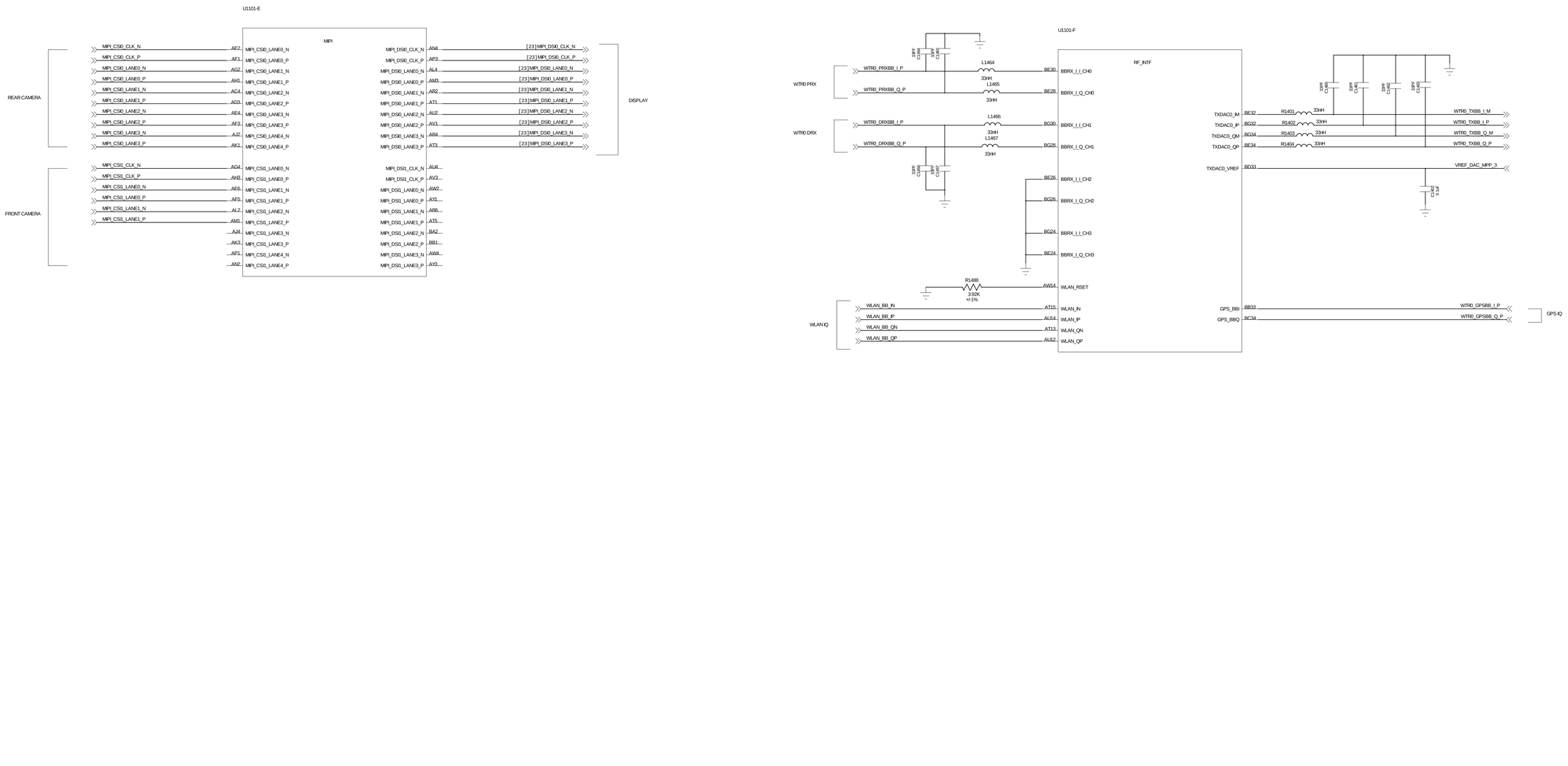

MSM8937 MIPI and RF Control

QUALCOMM Technologies, Inc.
5775 Morehouse Drive
San Diego, CA 92121-1714
U.S.A.

Title

Size | Sheet Name | Rev

Date: | Sheet of

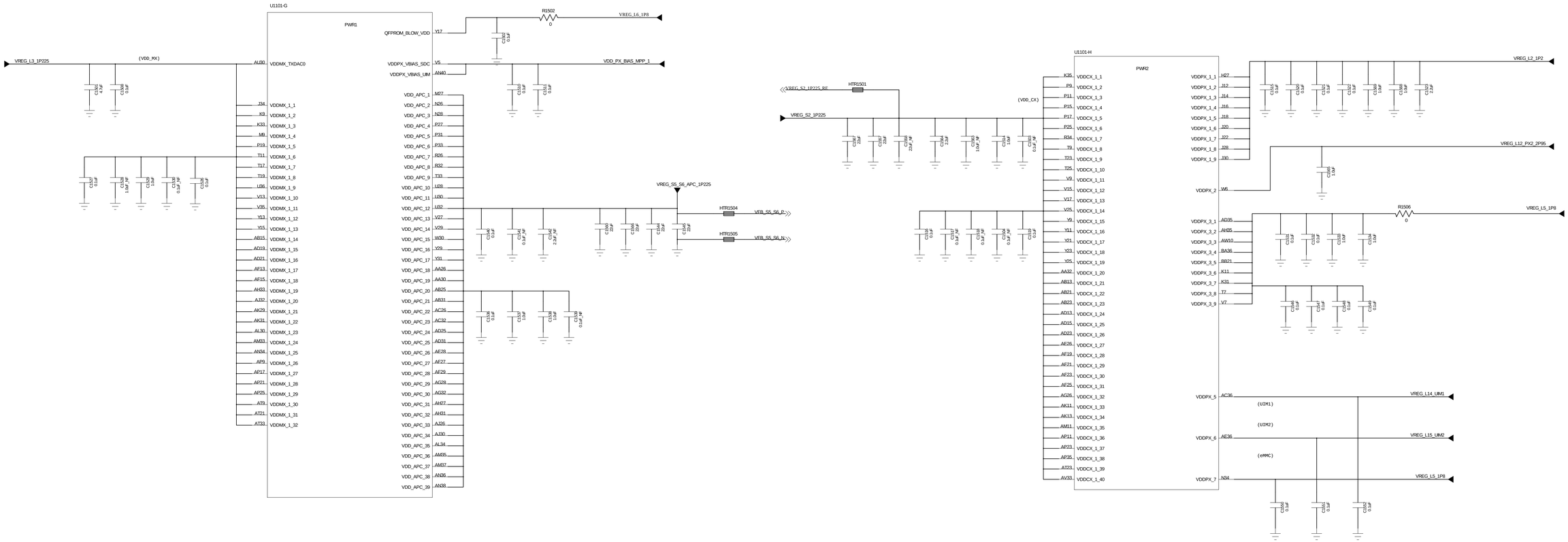

MSM8937 POWER1

QUALCOMM Technologies, Inc.
5775 Morehouse Drive
San Diego, CA 92121-1714
U.S.A.

Title

Size | Name | Rev

Date: | Sheet | of

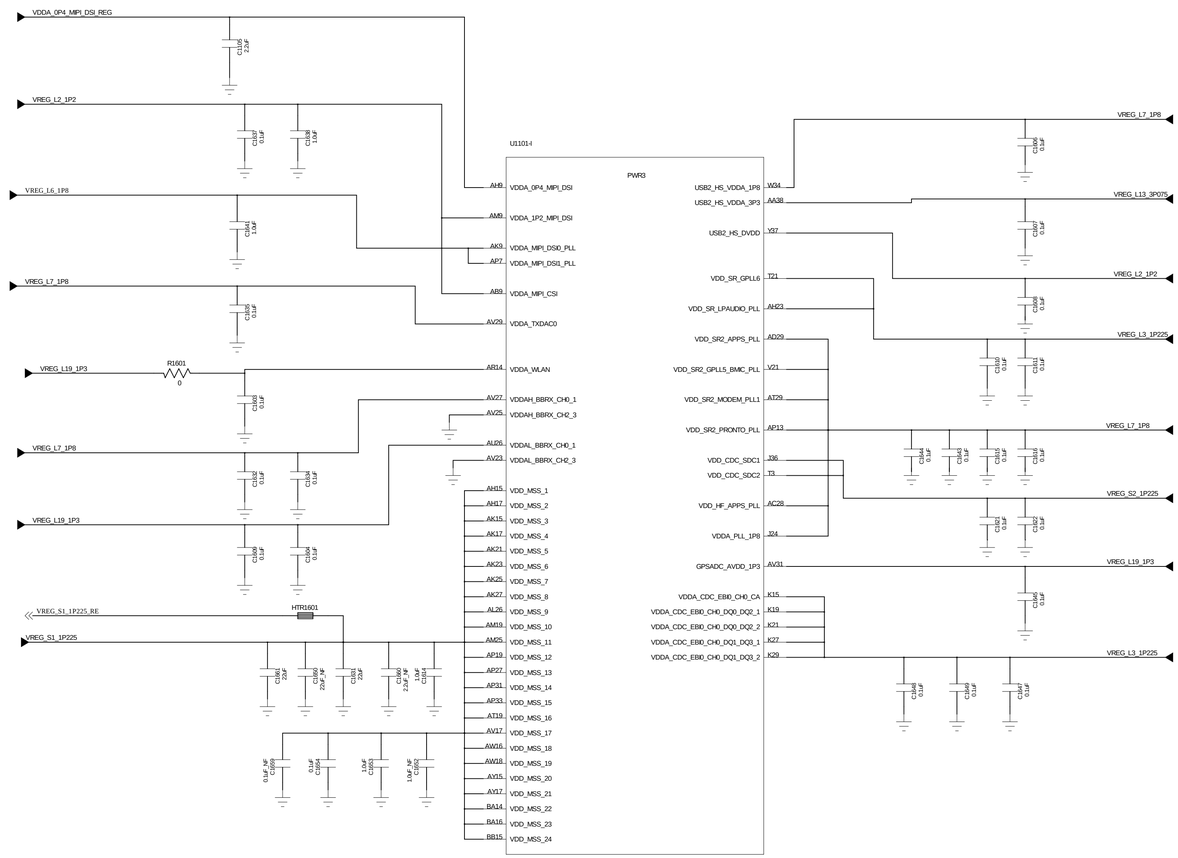

MSM8937 POWER2

QUALCOMM Technologies, Inc.
5775 Morehouse Drive
San Diego, CA 92121-1714
U.S.A.

Title

Size	Name	Rev

Date: Sheet of

U1101-L

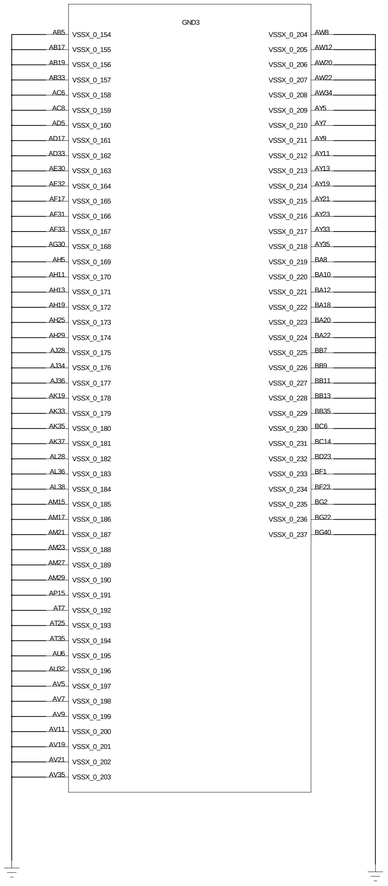

U1101-J

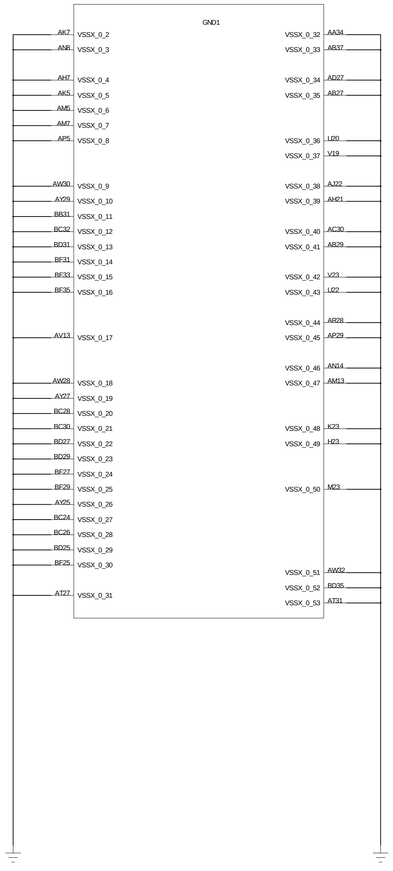

U1101-K

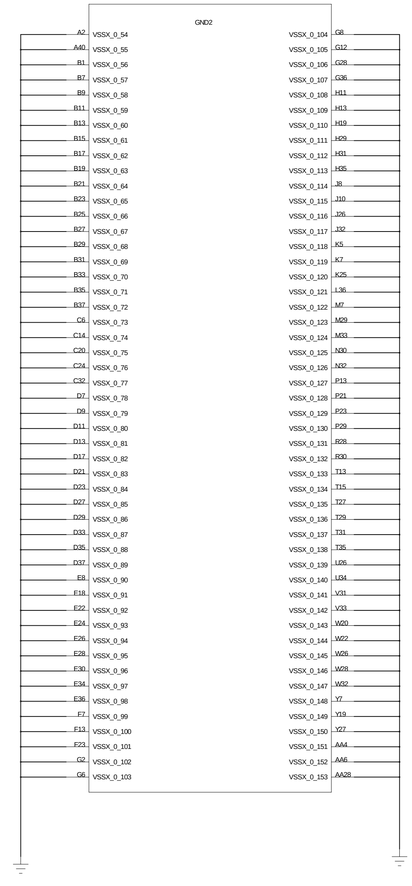

MSM8937 GND

QUALCOMM Technologies, Inc.
5775 Morehouse Drive
San Diego, CA 92121-1714
U.S.A.

Title

Size | Sheet Name | Rev

Date: | Sheet of

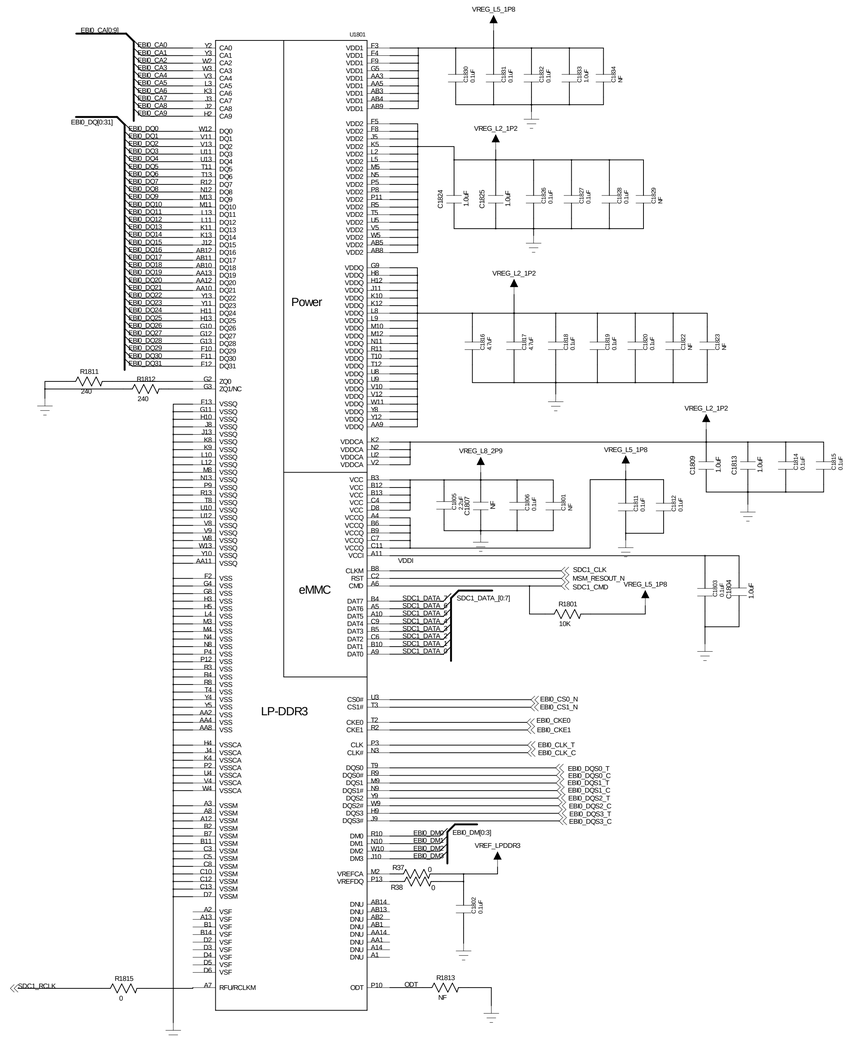

MEMORY:LPDDR3+EMMC

QUALCOMM Technologies, Inc.
5775 Morehouse Drive
San Diego, CA 92121-1714
U.S.A.

Title

Size | Name | Rev

Date: | Sheet | of

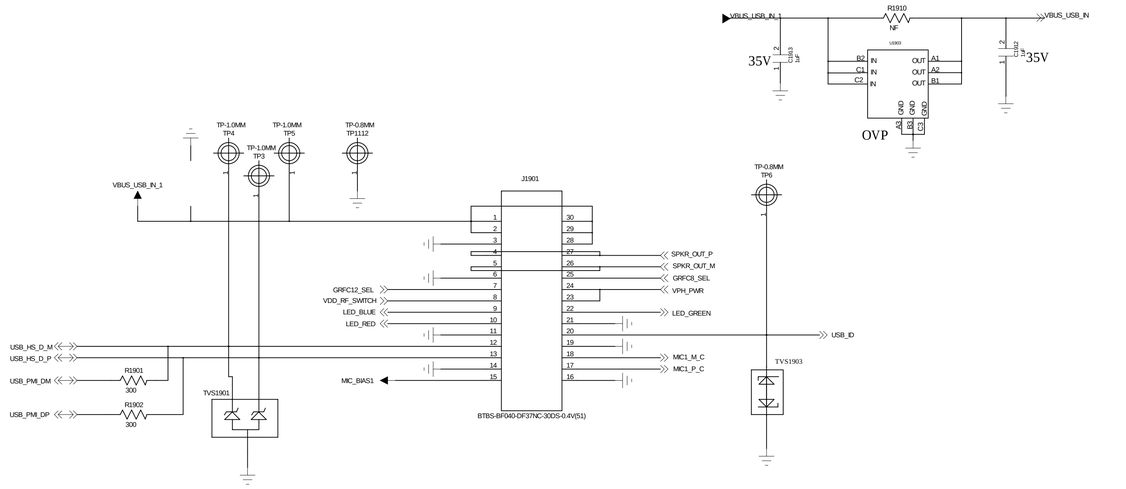

M-MIC+USB+RGB+SPK

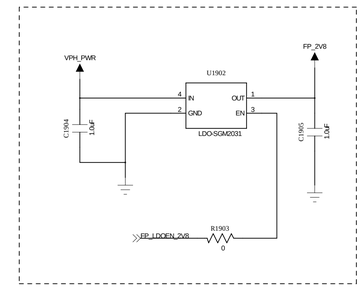

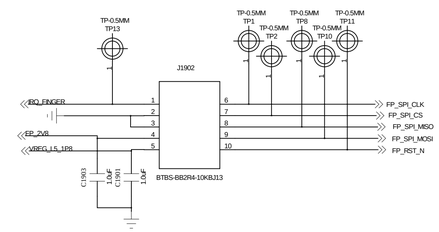

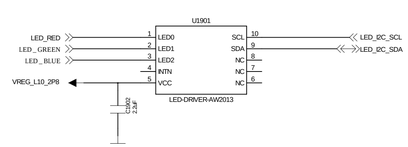

RGB

USB/SUB BOARD CONNECTOR

QUALCOMM Technologies, Inc.
5775 Morehouse Drive
San Diego, CA 92121-1714
U.S.A.

Title

Size | Name | Rev

Date: | Sheet | of

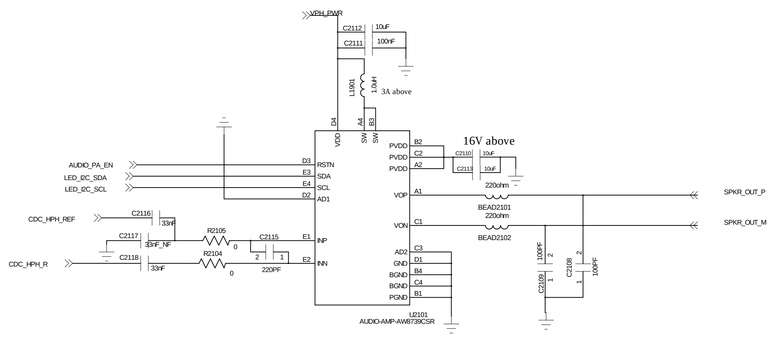

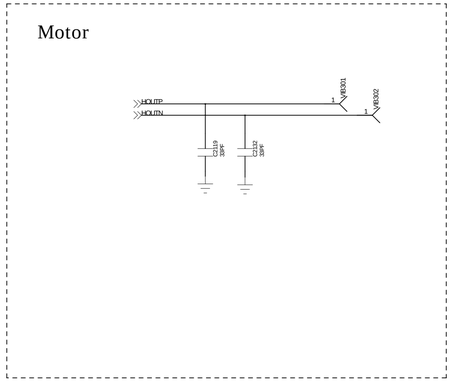

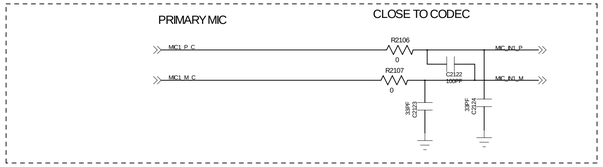

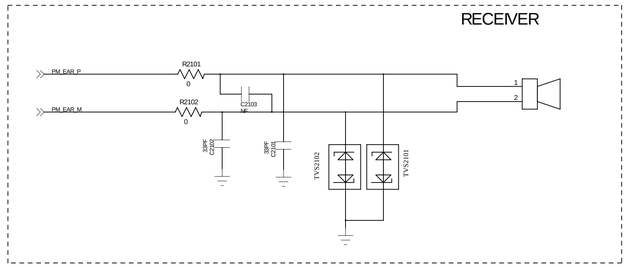

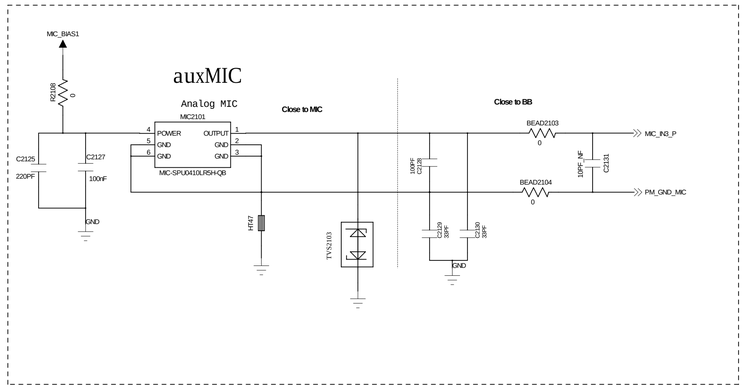

SECONDARY MIC/RECEIVER

QUALCOMM Technologies, Inc.
5775 Morehouse Drive
San Diego, CA 92121-1714
U.S.A.

Title

Size | Name | Rev

Date: | Sheet of

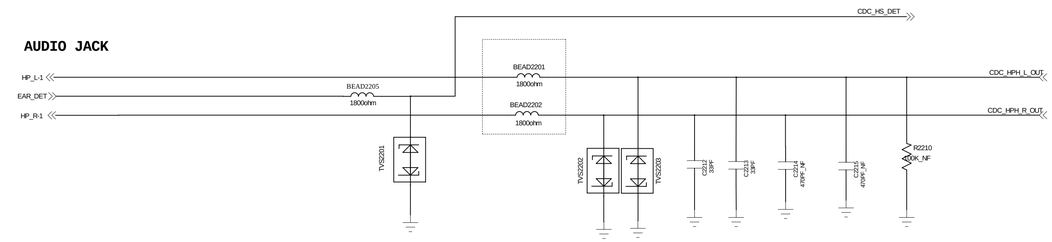

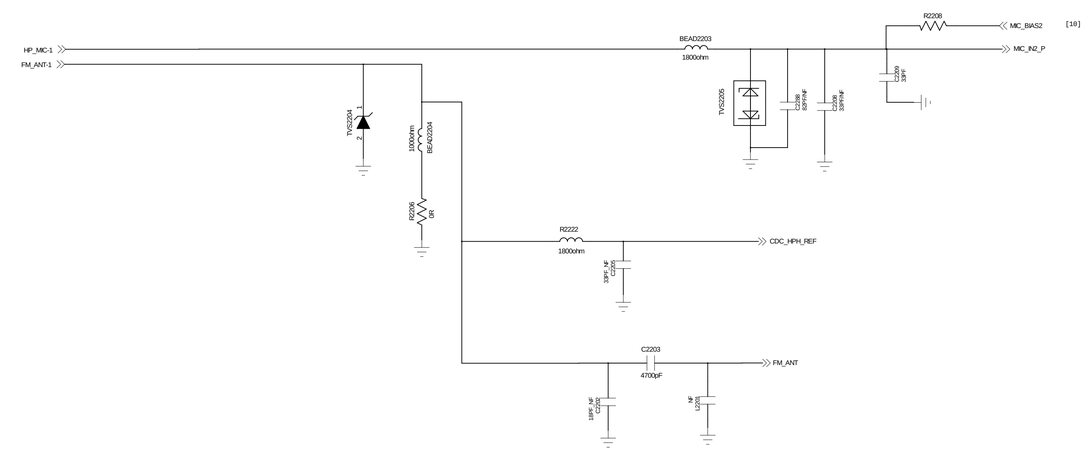

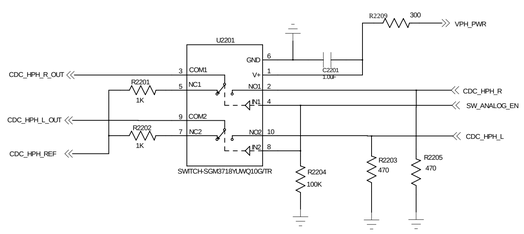

EARPHONE

QUALCOMM Technologies, Inc.
5775 Morehouse Drive
San Diego, CA 92121-1714
U.S.A.

Title

Size	Name	Rev

Date: Sheet of

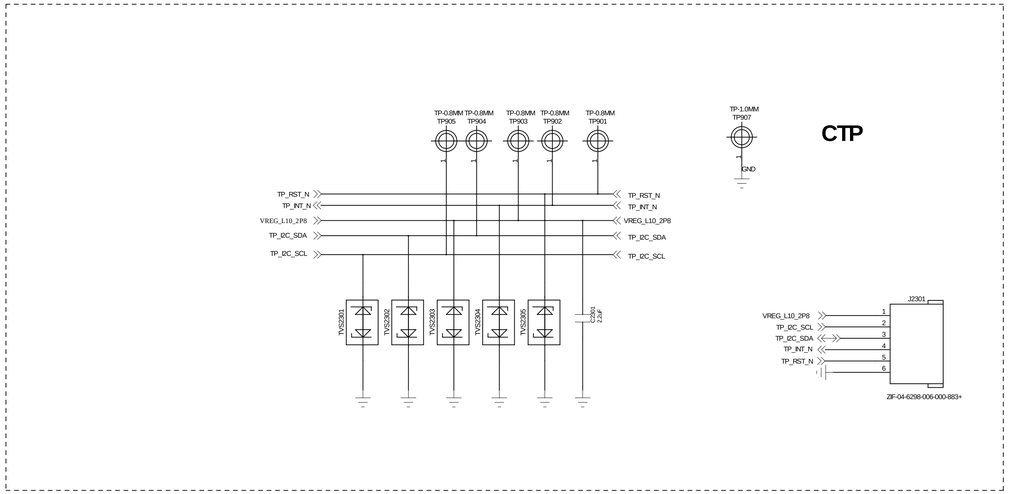

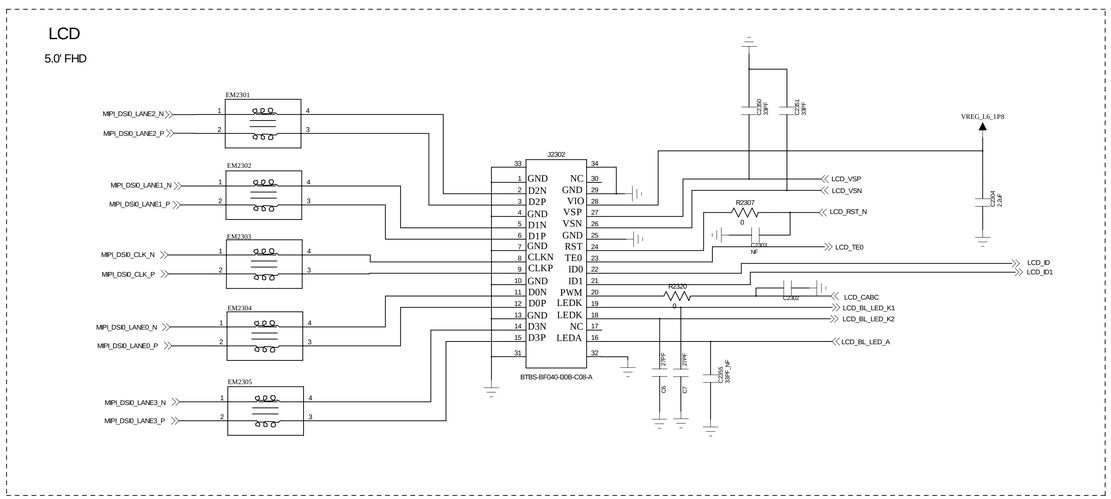

LCD interface and backlight

QUALCOMM Technologies, Inc.
5775 Morehouse Drive
San Diego, CA 92121-1714
U.S.A.

Title

Size | Name | Rev

Date: | Sheet of

FRONT_camera

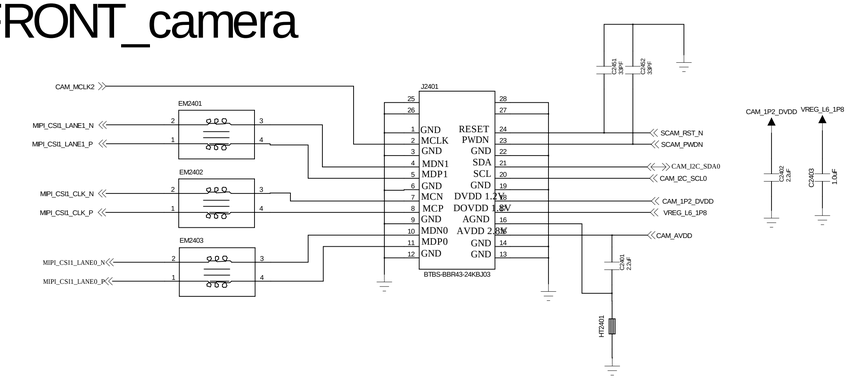

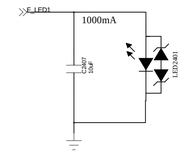

FLASH LED

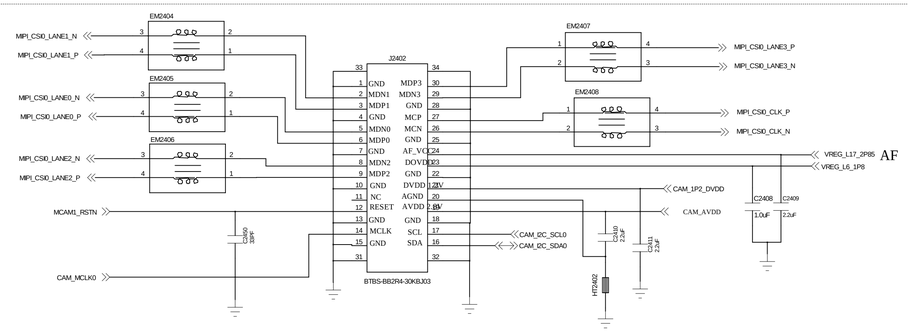

Main Camera

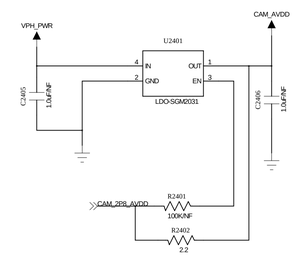

Main/Slave Camera and Flash

QUALCOMM Technologies, Inc.
5775 Morehouse Drive
San Diego, CA 92121-1714
U.S.A.

Title

Size | Name | Rev

Date: | Sheet | of

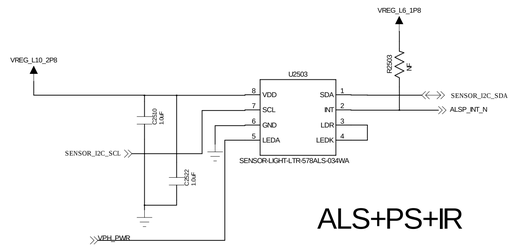

ALS+PS+IR

Gyroscope

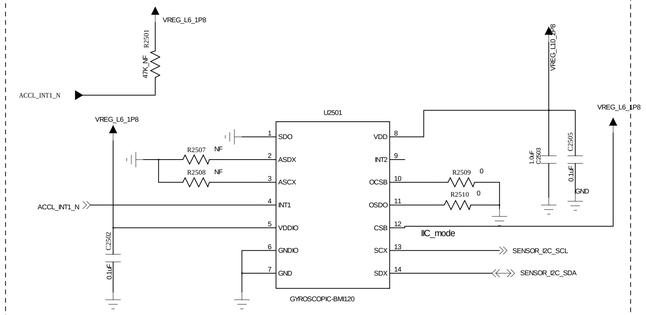

M-Sensor

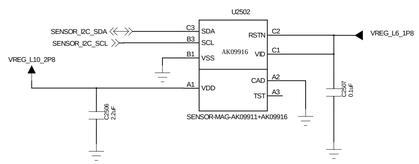

INFARED LEDS

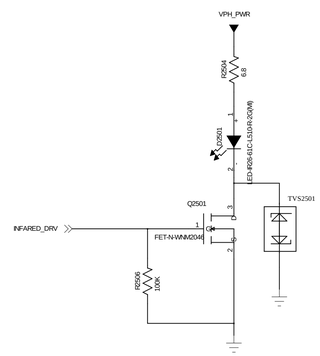

SENSORS

		QUALCOMM Technologies, Inc. 5775 Morehouse Drive San Diego, CA 92121-1714 U.S.A.
		Title
		Size / Sheet Name / Rev
		Date: / Sheet / of

SIM1

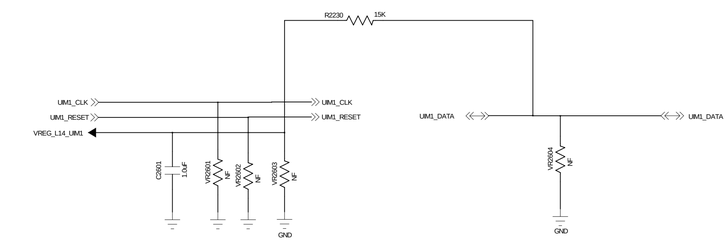

SIM2

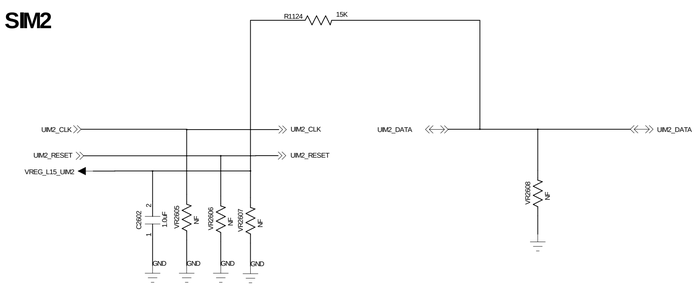

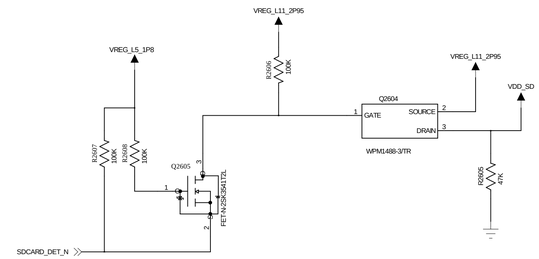

SD CARD

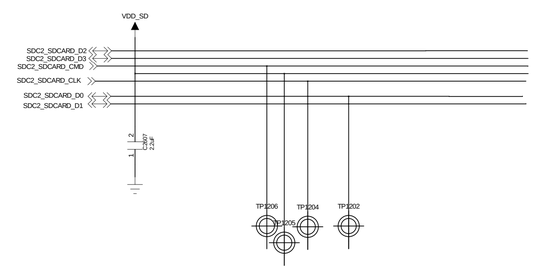

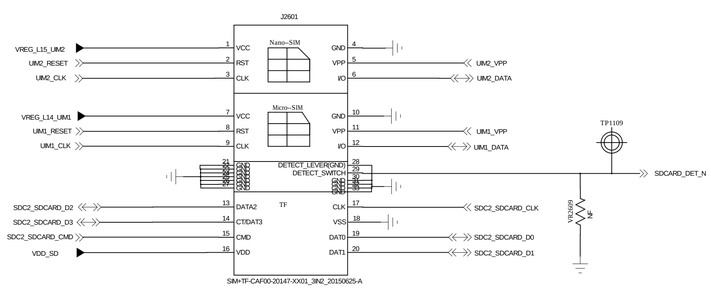

SIM/TF card

QUALCOMM Technologies, Inc.
5775 Morehouse Drive
San Diego, CA 92121-1714
U.S.A.

Title

Size | Name | Rev

Date: | Sheet of

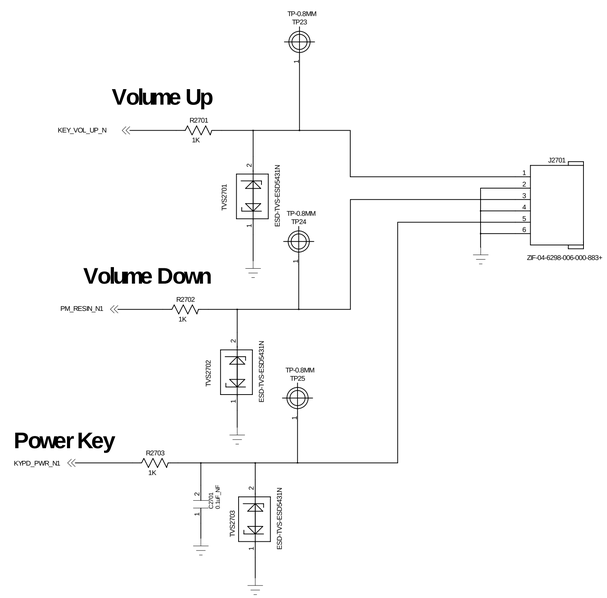

Keypad/LED/Status indicator

QUALCOMM Technologies, Inc.
5775 Morehouse Drive
San Diego, CA 92121-1714
U.S.A.

Title

Size | Sheet Name | Rev

Date: | Sheet of

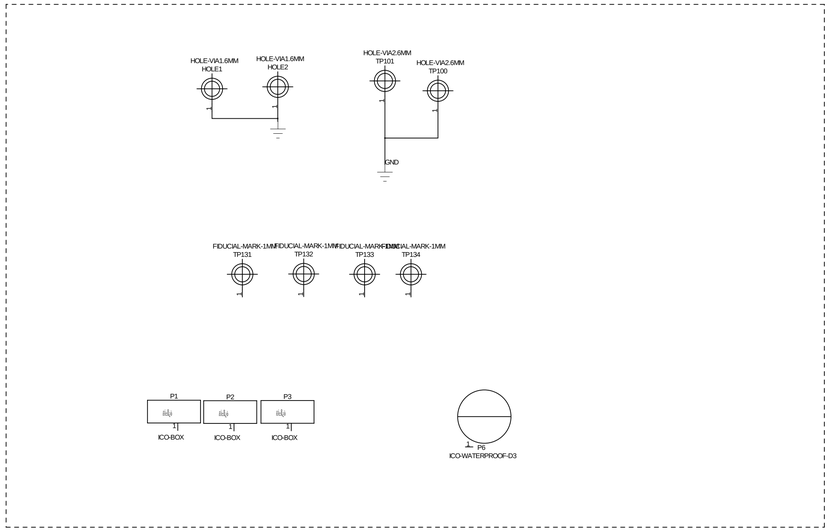

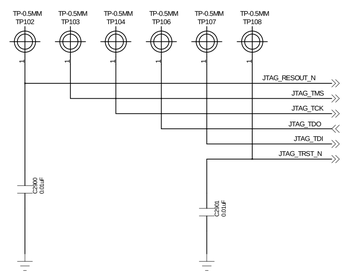

JTAG CONNECTOR

Test Point

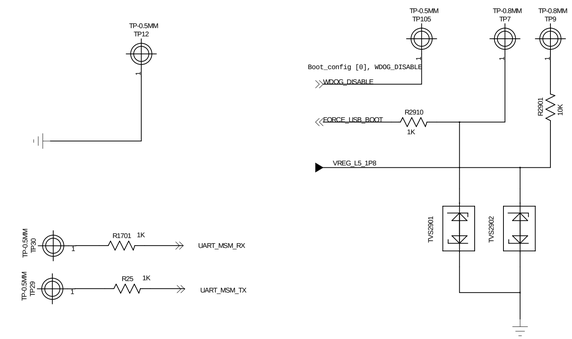

Test Point/Shields

QUALCOMM Technologies, Inc.
5775 Morehouse Drive
San Diego, CA 92121-1714
U.S.A.

Title

Size | Name | Rev

Date: | Sheet | of

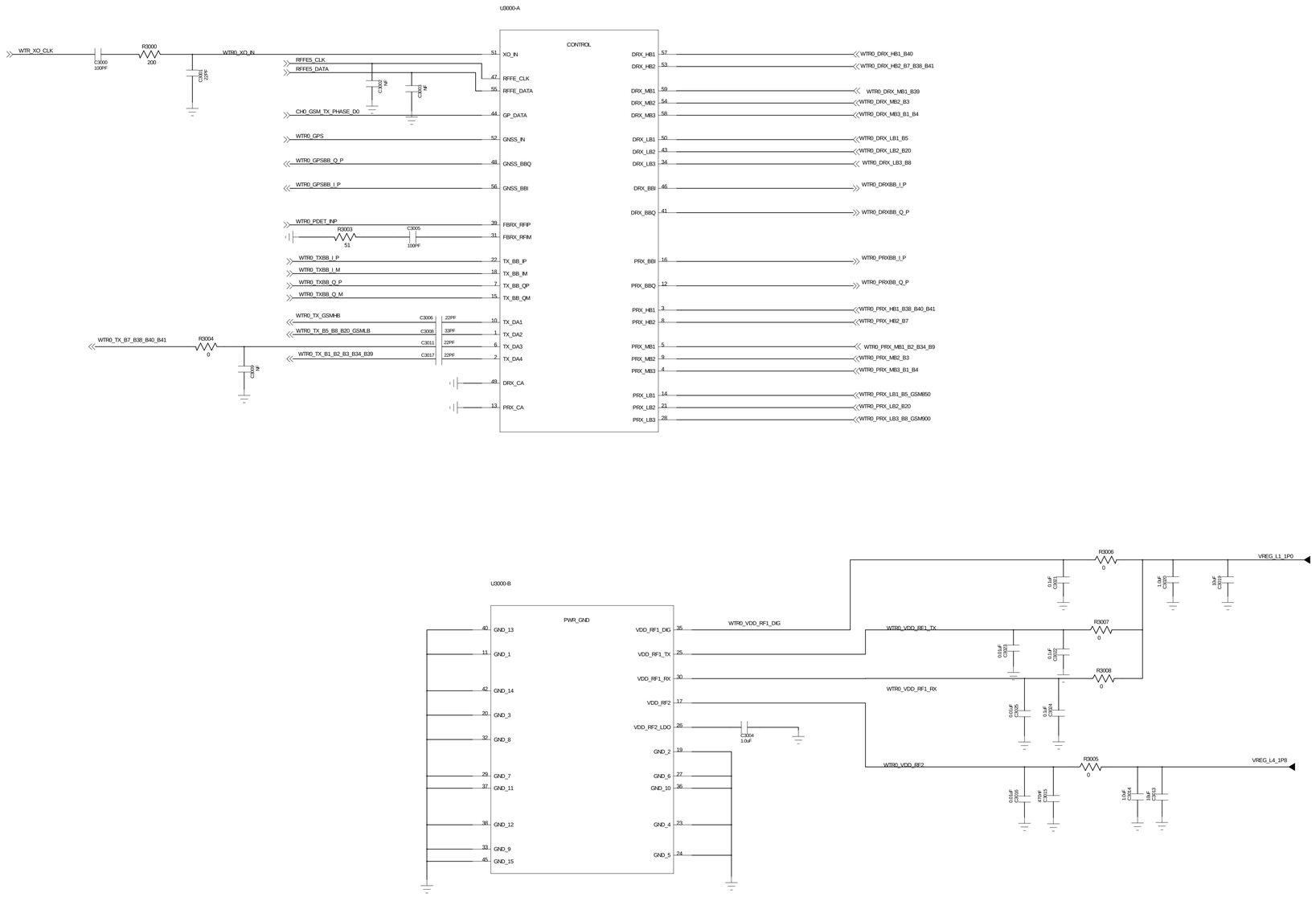

WTR 2955

QUALCOMM Technologies, Inc.
5775 Morehouse Drive
San Diego, CA 92121-1714
U.S.A.

Title

Size	Sheet Name	Rev

Date: Sheet of

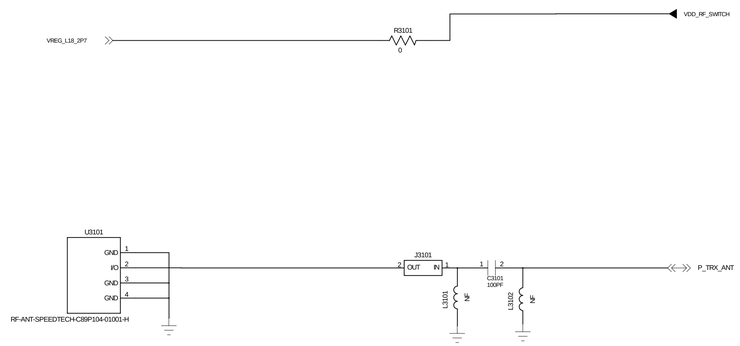

Title

Size | Sheet Name | Rev

Date: | Sheet of

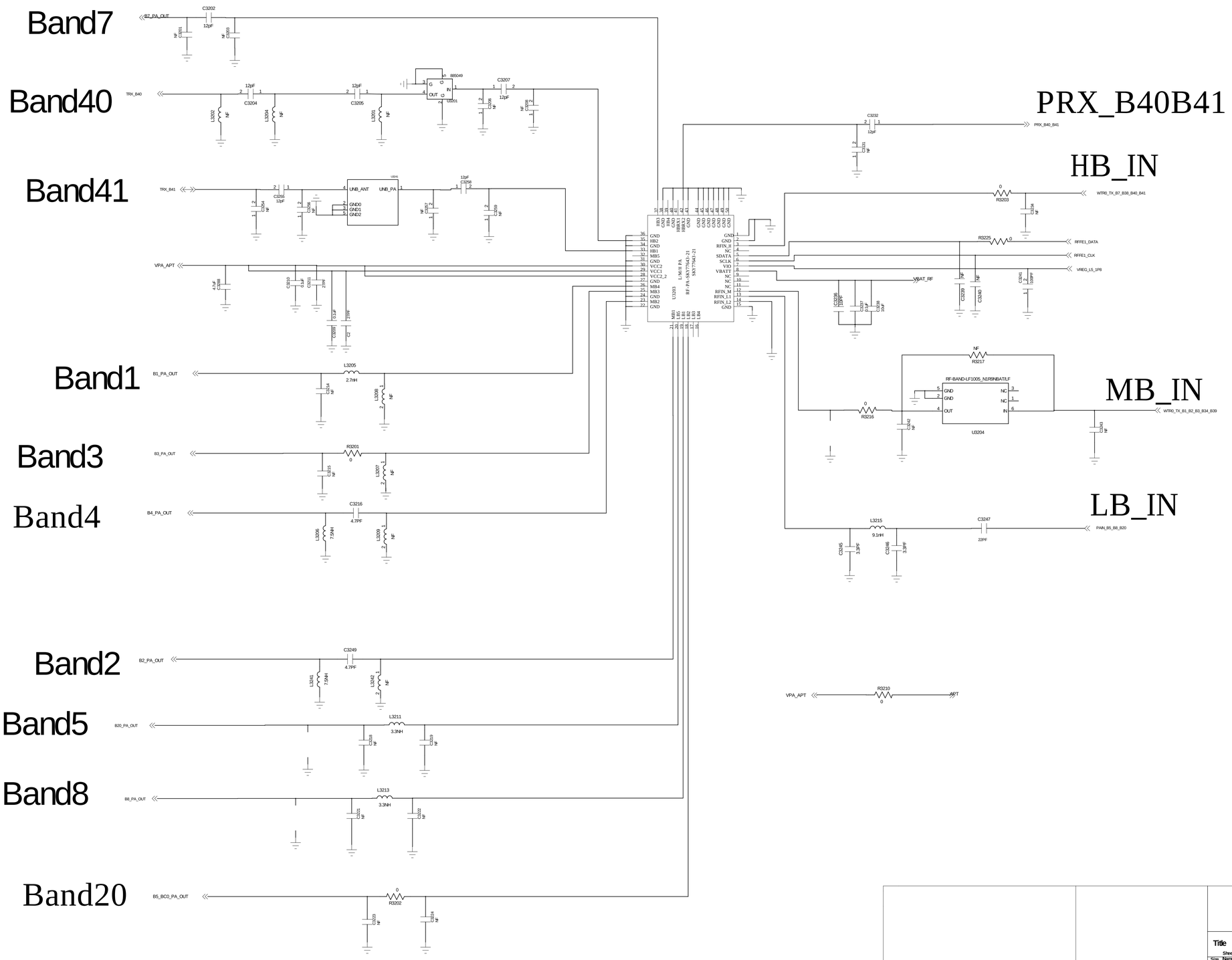
Band7
Band40
Band41
Band1
Band3
Band4
Band2
Band5
Band8
Band20
PRX_B40B41
HB_IN
MB_IN
LB_IN
B7_PA_OUT
TRX_B40
TRX_B41
VPA_APT
B1_PA_OUT
B3_PA_OUT
B4_PA_OUT
B2_PA_OUT
B20_PA_OUT
B8_PA_OUT
B5_BC0_PA_OUT
PRX_B40_B41
WTR0_TX_B7_B38_B40_B41
RFFE1_DATA
RFFE1_CLK
VREG_L5_1P8
VBAT_RF
WTR0_TX_B1_B2_B3_B34_B39
PAIN_B5_B8_B20
VPA_APT
APT
U3203
U3204
RF-BAND-LF1005_N1R9NBATILF
Title
Size
Name
Rev
Date:
Sheet
of

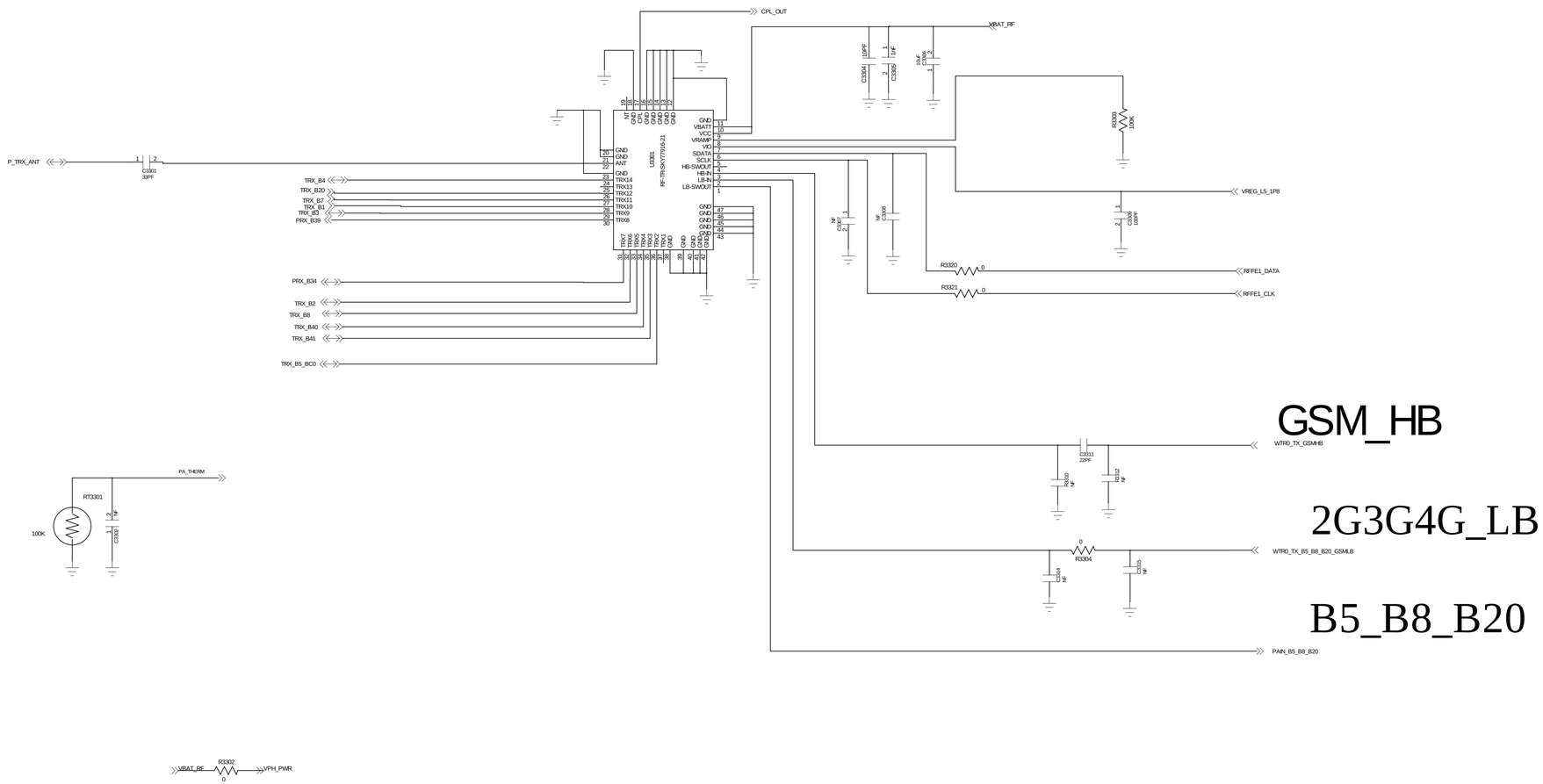

Title

Size | Name | Rev

Date: | Sheet of

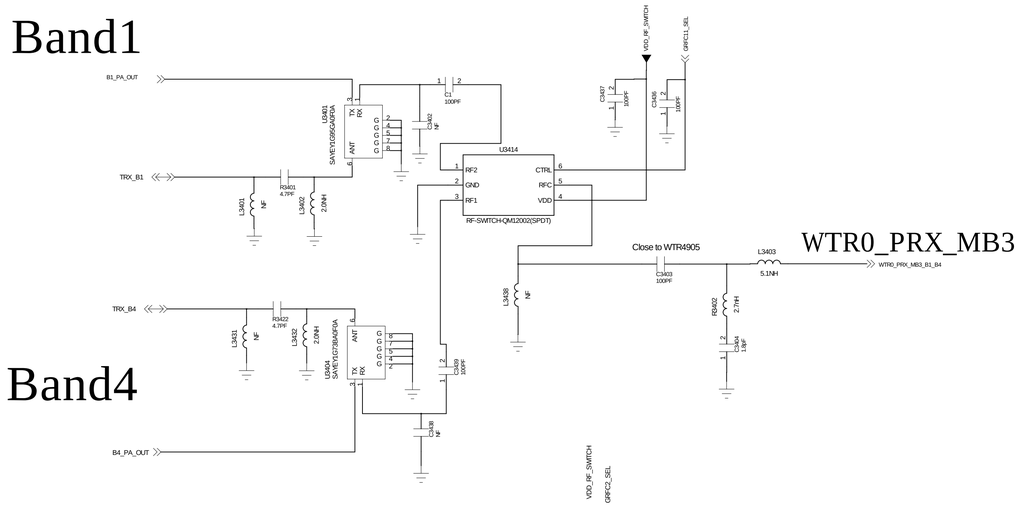

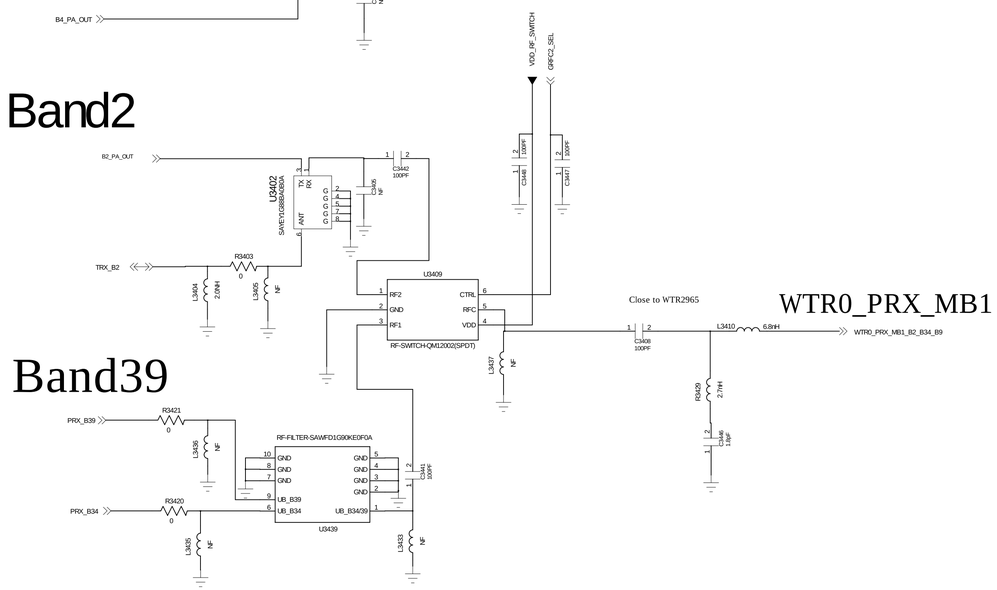

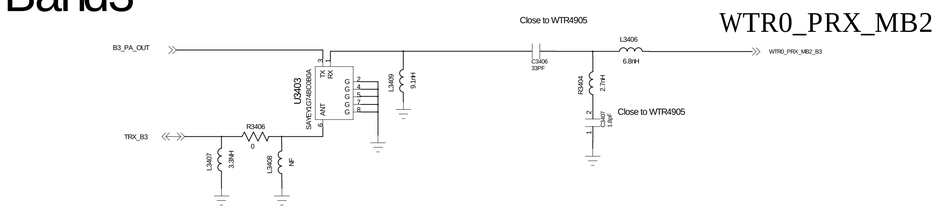

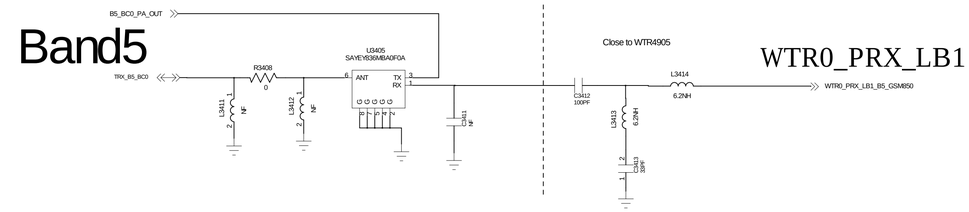

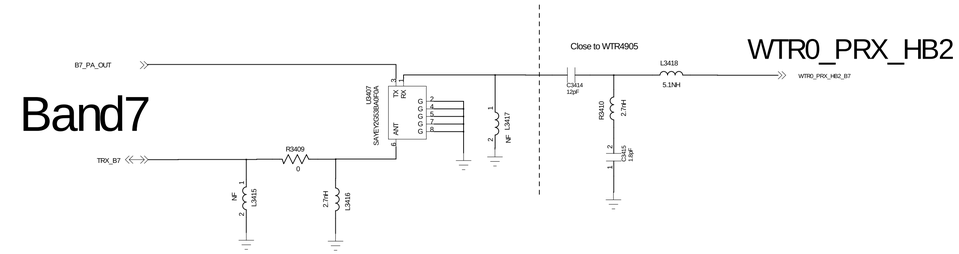

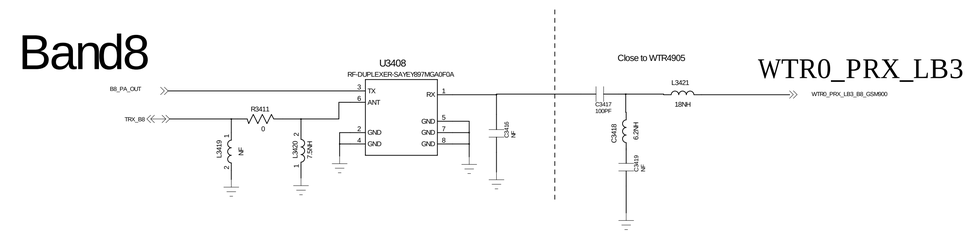

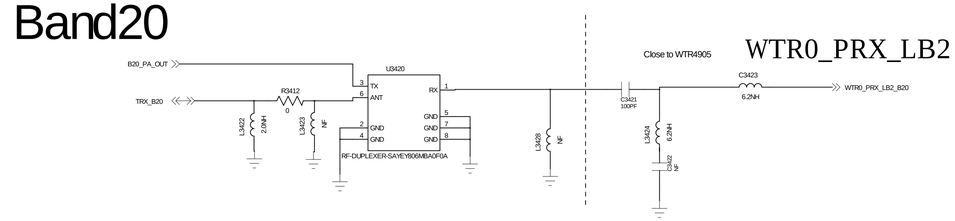

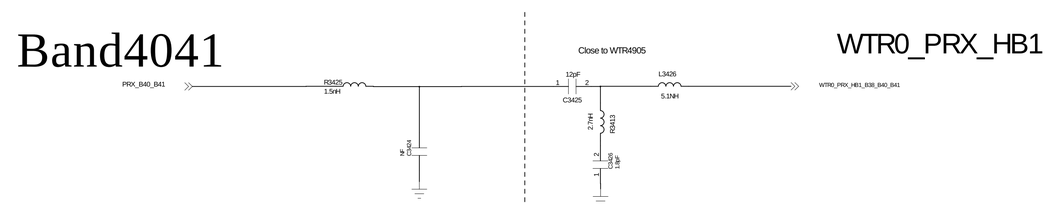

Title

Sheet

Size | Name | Rev

Date: | Sheet | of

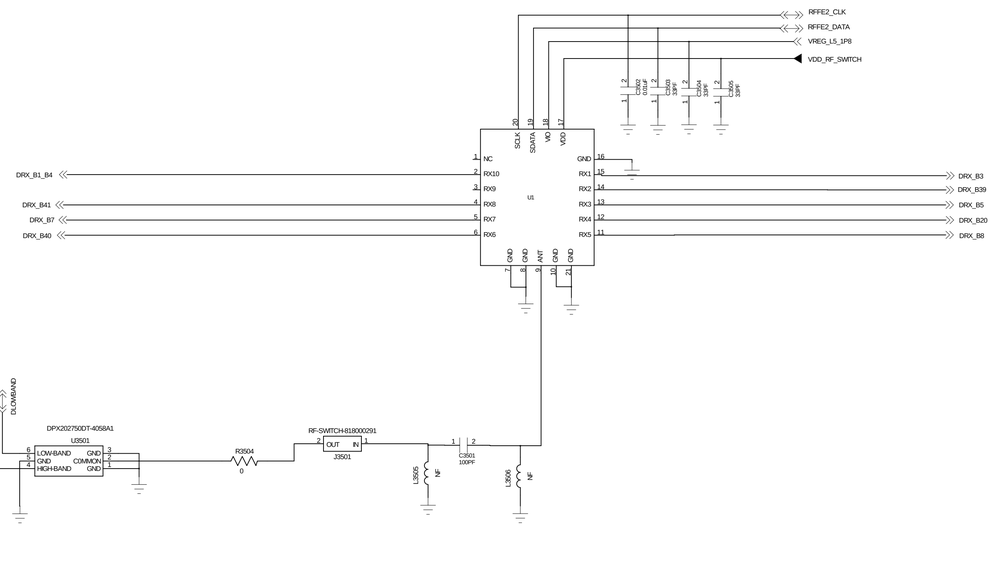

Title

Size: Name: Rev

Date: Sheet of

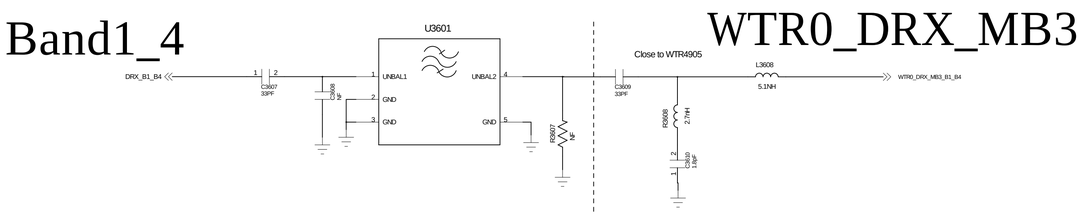

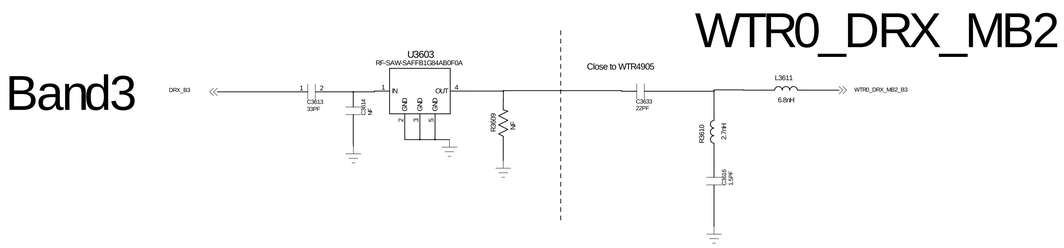

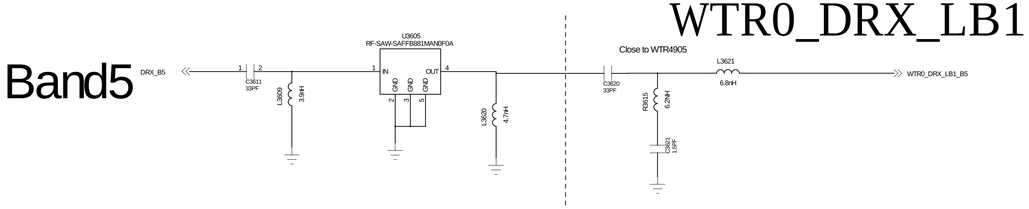

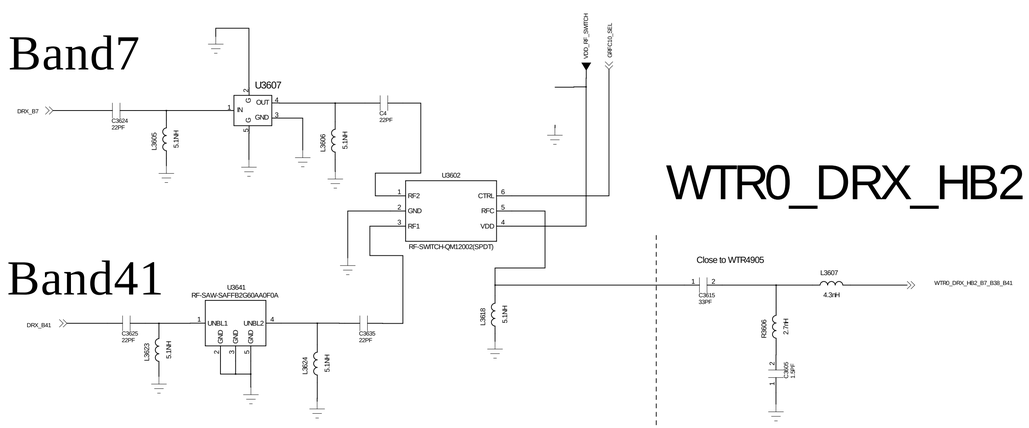

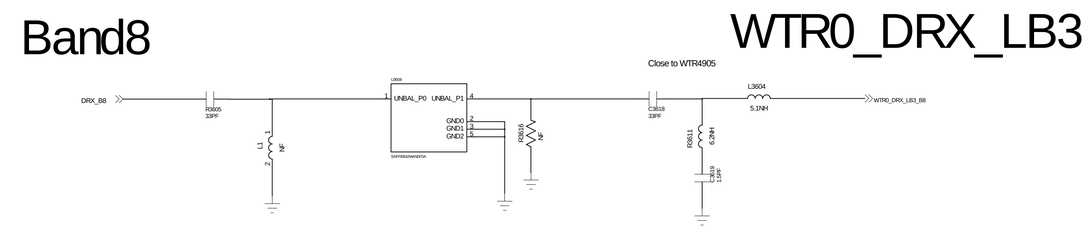

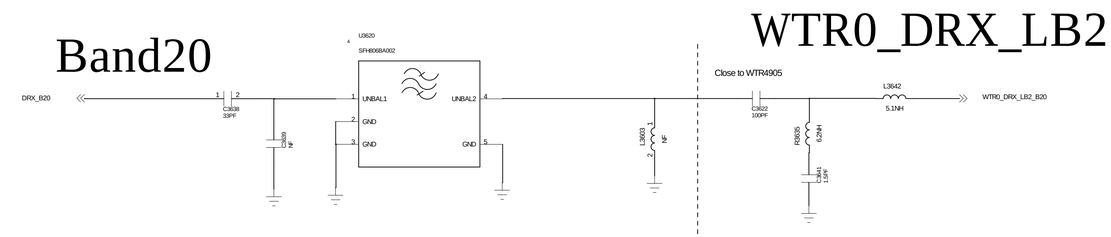

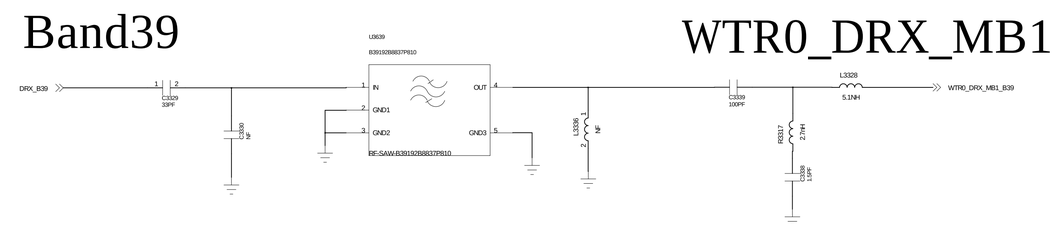

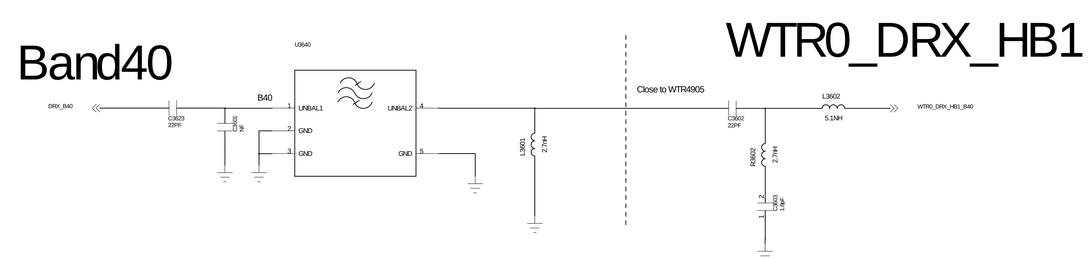

Title

Sheet

Size | Name | Rev

Date: | Sheet | of

SPDT

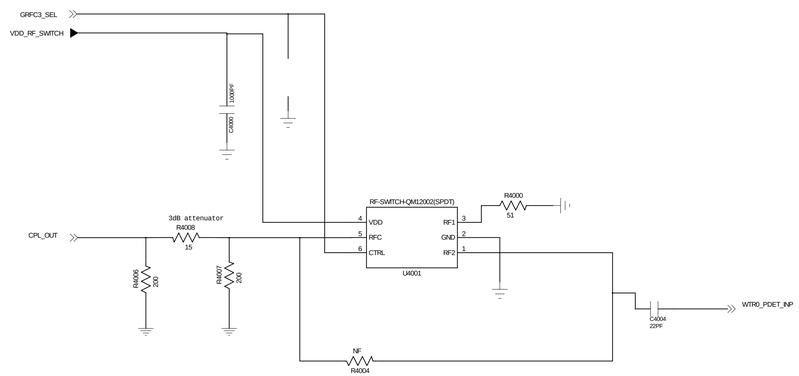

QUALCOMM Technologies, Inc.
5775 Morehouse Drive
San Diego, CA 92121-1714
U.S.A.

Title

Size	Name	Rev

Sheet

Date: Sheet of

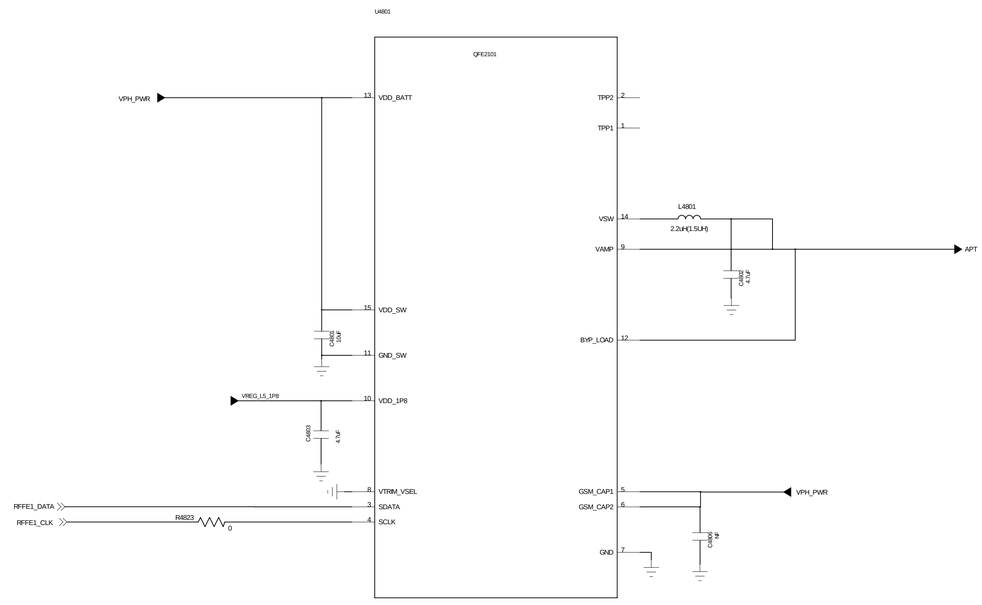

Title

Sheet

Size	Name	Rev

Date: Sheet of

WCN

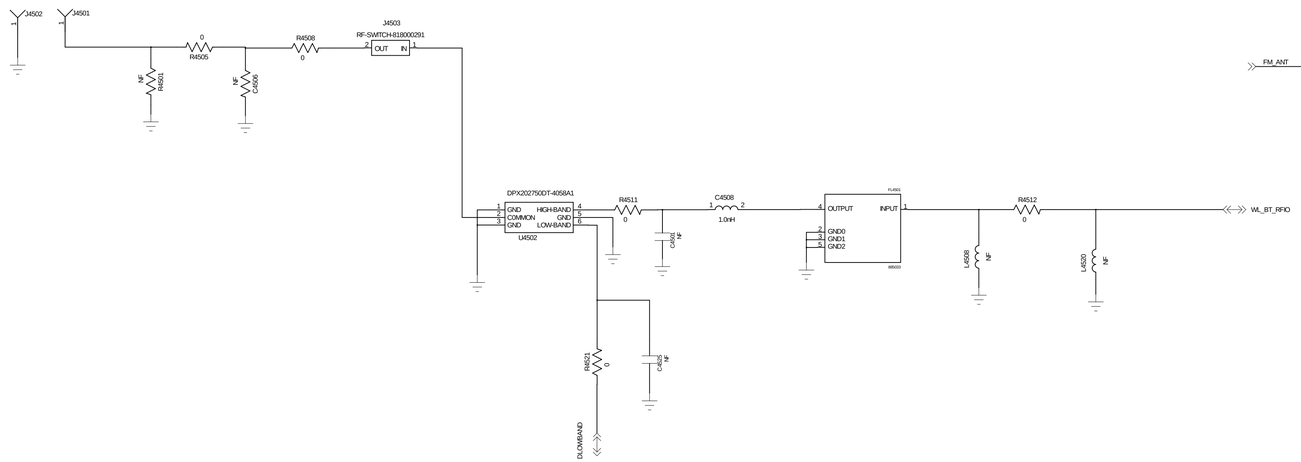

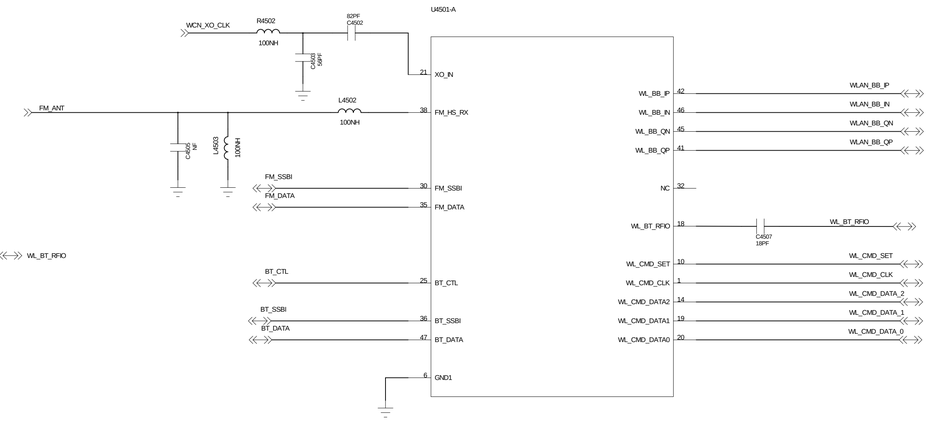

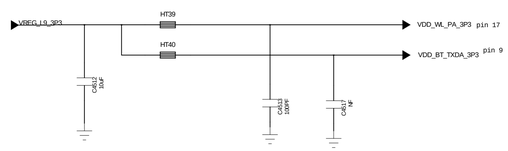

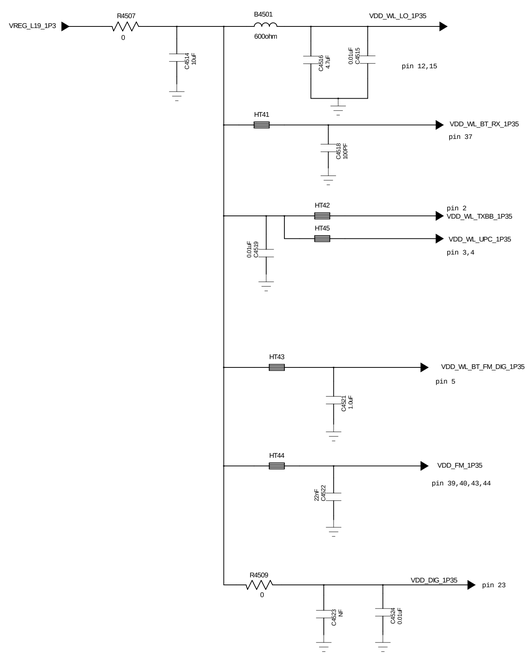

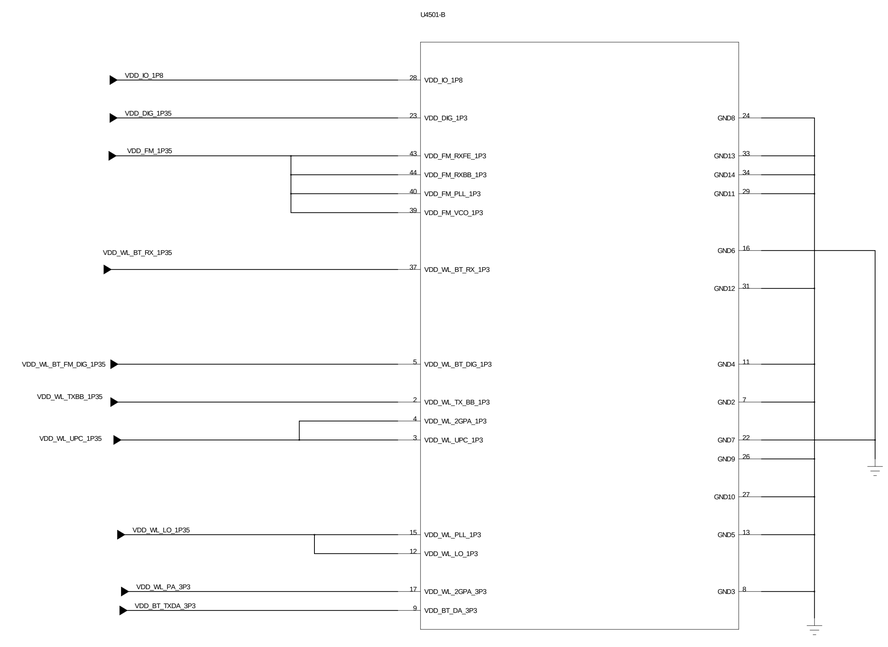

QUALCOMM Incorporated
6775 Morehouse Drive
San Diego, CA 92121-1714
U.S.A.

Title

Size | Name | Rev

Date: | Sheet | of

GPS

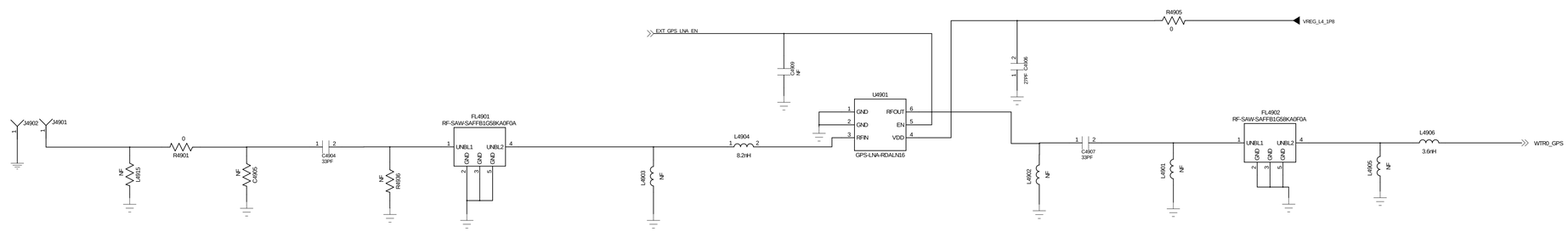

GPS

Title

Size | Name | Rev

Date: | Sheet | of